TT 520
.P51
Copy 1

THE

SCIENTIFIC TAILOR

BASED ON GEOMETRY

A method of designing and drafting patterns for all classes of garments for men, women and children, to actual and composite measures . . . . . .

FOR

FACTORIES, TAILORS, LADIES' TAILORS, DRESS-MAKERS, AND SCHOOL PURPOSES.

BY

F. L. PHELPS.

VOLUME I. WOMEN'S GARMENTS

LIBRARY of CONGRESS
Two Copies Received
JAN 1905
Copyright Entry
Nov. 5, 1904
CLASS a XXc. No.
100902

Copyrighted 1904.

E. L. PHELPS.

PREFACE.

In offering this work to the public, the author begs to say, that while it is, as the title implies, wholly a scientific method, it is not theoretical; as he has not only put each and every part into practical operation by cutting and making garments to the within diagrams, but he has also taught the same to designers and cutters who are using, and have been using for a number of years, this method in some of the best establishments in the United States and Canada. He has also taught a great number of people who knew nothing about designing, and they are holding responsible positions, and drawing good salaries.

During the past ten years the author has made a thorough and practical study of garment-making, having travelled from one city to another, teaching the designers and cutters in the various establishments, watching the garments in their different stages of manufacture, and seeing the result of the work on the persons for whom they were designed. So that he not only understands the cutting of a pattern, but the cutting of the goods and making of the garment as well.

There is offered in this work not only the result of his own personal study and experiments, but many valuable points gleaned from the various institutions wherein he has taught drafting and designing.

This method, while very simple, must be fully understood to be used in an intelligent manner, and with good results. Do not skip over a portion of the work thinking it of no importance, for it is all for a purpose, and leading to an end which can only be reached by the course herein laid down; it is purely of an educational nature, and there is a reason for each and every move, and if you will learn and fully comprehend that reason, you will have no difficulty in designing any and all garments that will be worn. Style is simply variation, and the designer who will fully master the problems contained in this volume will have no difficulty in drafting patterns for any and all garments that may from time to time be in vogue, for the foundation and principles are herein contained.

There are no proportions used, each pattern being drafted to measures; therefore there are no hard or easy forms to fit, for if the measures are taken correctly, and the pattern drafted to those measures, the garment must fit. By this method there is no supposition — that one part of the human form should be a fractional part of the bust, or some other measure, thereby establishing an ideal, or so-called perfect form; but it is based upon the well-known fact that each person has an individual form, and in order to draft a pattern that will fit, each separate part must be measured, the question being not what a certain form should be — but what shape is it? Measurements in inches will answer the question. Factory

or stock garments are drafted to composite measures, the schedule for them being given in other volumes treating on factory work, but the principles and foundation for the same are herein contained.

In the making of garments of any description, the pattern is not all, but it is the foundation on which you build, and while you can build poorly on a good foundation, it is impossible to build well on a poor foundation. Care should be taken, therefore, not only in the preparation of the pattern, but in marking out and cutting of the goods as well.

No field offers greater inducements to a young man or woman to-day than the designing of garments and drafting of patterns for the same, and the individuals who fit themselves to do first-class work will always have a pleasant and remunerative business, for they can rest assured that no machine will be invented that will take their place in the industrial world.

This work does not contain all there is to designing, but it is the foundation on which you can build as high as your ambition and ability will carry you. For a number of years the author has been urged by people he has taught to put this method in book form, and he now offers the same to the public, both complete and comprehensive. Do not get the idea that if you have a book you do not want a teacher, for the country is filled with grammars, arithmetics, and other first-class text books, but no person would think of dispensing with the schools, but go to a first-class teacher, and learn the philosophy of the industry, for life is too short to spend one's time in studying it all out without assistance.

If it is impossible to take personal lessons, one may learn it by study and close application, as many of our early statesmen have acquired an education in that manner.

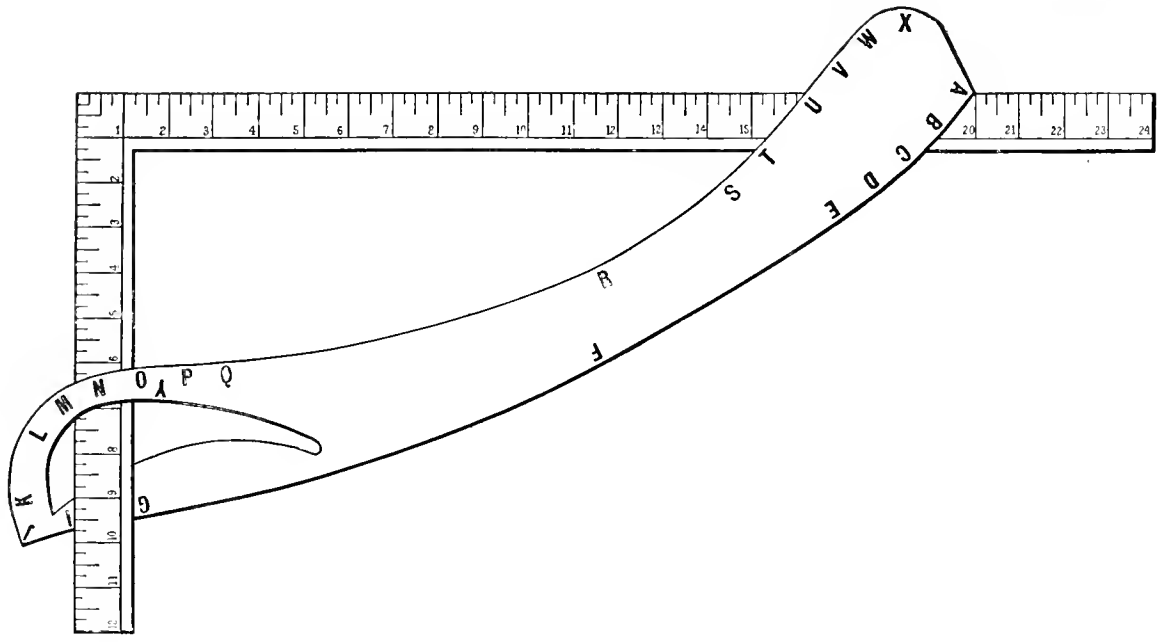

INTRODUCTORY.

In drafting of patterns by this method, the necessary tools and appliances are:

FIRST.

A square to draw the straight lines to measure the various distances, and to draw the right angle lines, of which there are many.

In purchasing a square, do not select one that is in general use among tailors, having the bust or breast measure divided into $\frac{1}{2}$, $\frac{1}{4}$, $\frac{1}{3}$, $\frac{1}{6}$, etc., but procure a square which has the inches divided into $\frac{1}{2}$, $\frac{1}{4}$ and $\frac{1}{8}$, as is shown in the illustration at the top of this page.

SECOND.

A tape measure with inches on it, and the same divided into the customary fractions of an inch.

This tape measure will be used to take the measures, and for measuring the armhole on the diagram, when made, in order that the sleeve may be the proper size to sew into the garment.

The tape measure is also used to make the sweep lines, which are so often mentioned in this work.

Sweep lines are parts of circles, the pivotal point being the centre or radiating point of the circle.

THIRD.

A curve-rule, which is illustrated on preceding page.

This curve-rule is simply a piece of metal, the edges of which form a great variety of curves, both simple and compound; these curves being such as are generally used by garment-designers in the making of patterns.

Each curve is designated by either a figure or a letter, so that having drawn a curve that suits the taste, and the purpose, it is an easy matter to duplicate that curve at any time.

Most of the designers make their curved lines with a free-hand movement, using the eye as a guide, but this method requires a great amount of practice to enable one to make the curve desired, and even then it is impossible to *duplicate* a curve.

With this curve-rule a novice can do as good work as an old designer, in the way of making curves, and an old designer can do more work, and better work, in the same length of time.

While the curve-rule is no more of a necessity with this method of work than it is with any other, it is such a convenience that a designer who has once tried it will never think of getting along without it, and being made of metal, it will last a life-time.

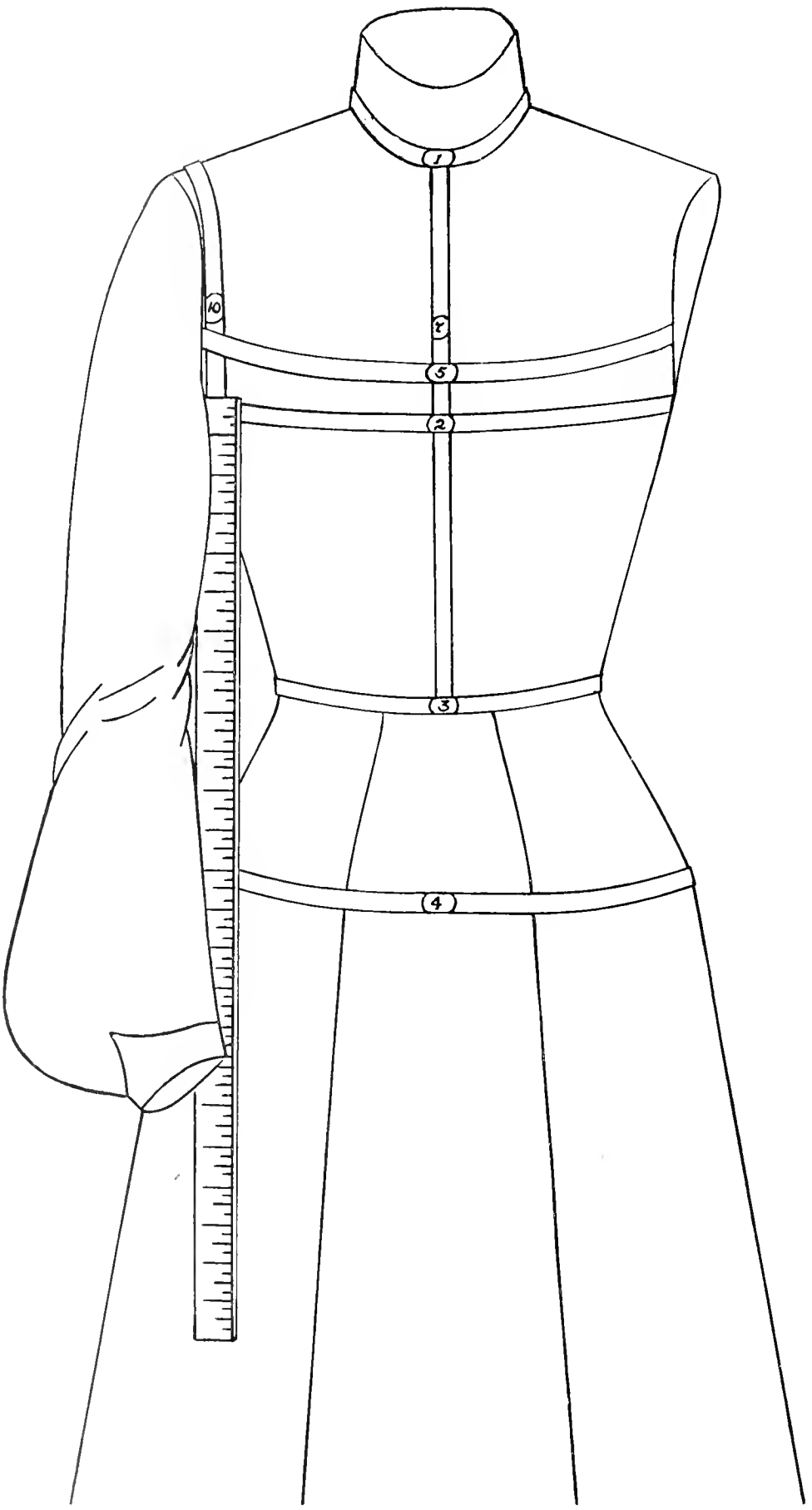
1
10
4
5
2
3
4

TO TAKE THE MEASURES.

In the drafting of patterns for garments by this method, the first and most important thing to do is to take correctly the proper measures, for they are the foundation on which the diagram is builded, and unless the measures are correct, it is impossible to draft a correct pattern.

Therefore study carefully the following instructions for taking measures. The numbers on the illustrations correspond with the numbers at the top of the descriptions of how to take the measures; *i. e.*, Measure No. 2 is the Bust Measure, and 2 on the illustration shows where the tape is placed on a person to take that measure.

NUMBER 1. THE NECK MEASURE.

Take the neck measure round the neck as shown in illustration, where the garment should come, but not over another garment.

When it is impossible to get at this part of the neck on account of the garment worn, take the neck measure above the collar and quite close around the neck, and to this amount add *one inch*. This will give the *neck measure* to use in drafting a pattern. The above directions are for a regular garment, but for a *shirt waist* add *one-half inch*, as the band will come higher than in a wrapper or a tight-fitting waist.

NUMBER 2. THE BUST MEASURE.

Take a position behind the person to be measured, and put the tape around as in illustration, placing it up close under the arms, and well up in the back, so as to cross the shoulder blades at their lower edges. Now hold the tape in the left hand, between the thumb and finger, and with the right hand reach around in front, and pull the tape down over the full part of the bust, as shown in the illustrations by line 2.

Take the bust measure quite loose, except in stout forms, where it may be taken reasonably close.

NUMBER 3. THE WAIST MEASURE.

Stand behind the person to be measured, and place the tape around the smallest part of the waist; then draw the tape real tight, so that it will seek the smallest part of the person, which is the natural waist line.

Never crowd it down to a fashionable waist line, but take the measure at the smallest part, where it will naturally come.

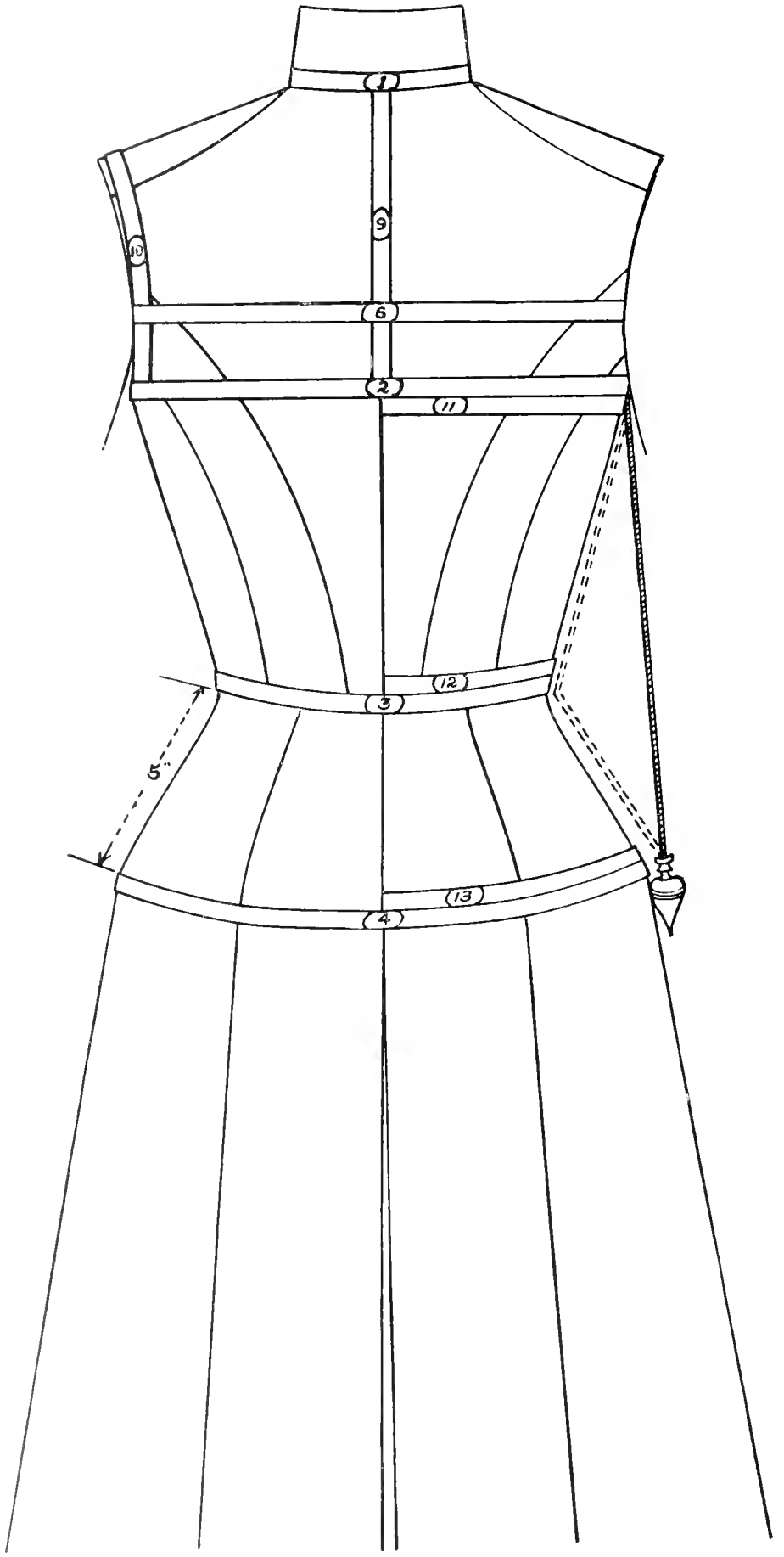
1
9
10
6
2
11
12
3
5"
13
4

NUMBER 4. THE HIP MEASURE.

Take the hip measure loosely around the hips, five inches below where the waist measure was taken. Do not take this tight, and be sure that it is taken five inches below the waist line.

NUMBER 5. THE CHEST MEASURE.

Let the person being measured drop the arms down at the side in a natural position.

Now measure with the tape across the chest, about one inch above the bust line, from the break of the muscle, at the arm on one side to the break of the muscle on the other side at the armhole.

Do not get the tape too high in the centre, but keep it level with the bust line, as shown in cut, by line 5.

Pay no attention to the armhole in the garment worn, but locate the points where the armholes should be, and measure between these points.

The tendency of beginners is to take this measure too long, which will necessitate paring out the armhole when the garment is tried on.

NUMBER 6. THE WIDTH OF BACK.

When the arms are straight down to the side, measure across the back, two inches above the bust line, from where the armhole should be on the one side, to where the armhole should be on the other side, as shown by line 6.

NUMBER 7. THE LENGTH OF FRONT.

Tie a cord around the waist, and draw it tight, so that it will seek the smallest part of the person.

Do not crowd it down, or use a belt, but use a cord and draw it tight; and if the party being measured tries to push it down, draw it so tight that she cannot move it from its actual place, namely, the smallest part of the person.

Now take the length of front from where the garment should come at the front of the neck, straight down the centre front to the cord at the waist, as shown by line 7.

Take this measure quite loose.

NUMBER 8. THE UNDER ARM MEASURE.

While the arm of the person being measured is down by the side, measure from close up under the arm, straight down to the cord at the waist.

Be very careful not to get this measure too long, for it is a defect hard to

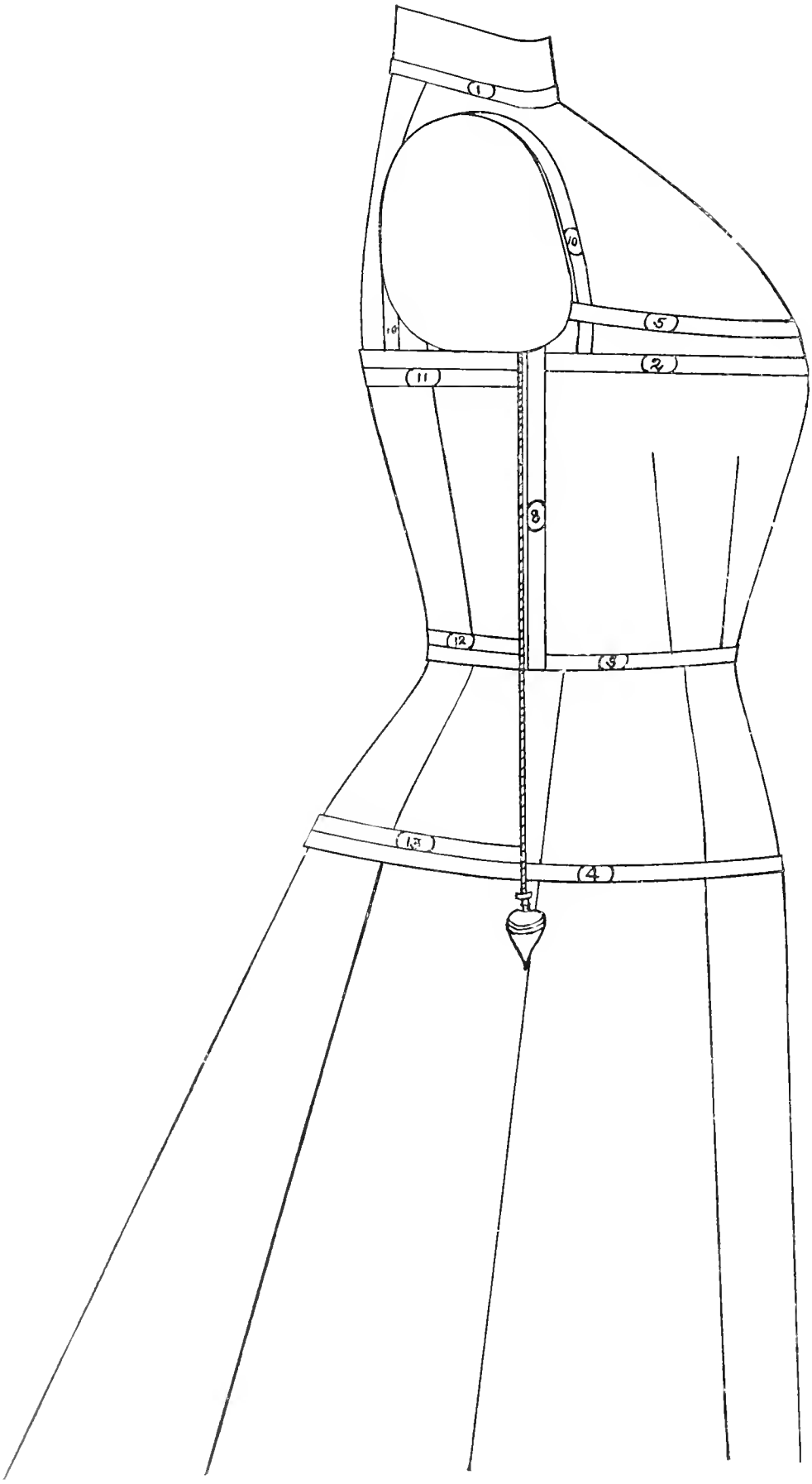
1
10
5
2
11
8
12
5
13
4

remedy, while if it is too short, it is easily changed so as to make a fit when the garment is tried on.

This measure is best taken with a flexible rule, or a piece of stiff card-board, to get the length, and then measure the card-board with the square; this will give the length in inches.

NUMBER 9. THE DEPTH OF SCYE.

Place a tape close up under the arm, thence across the back, and up close under the other arm. Have the person being measured hold their arms firmly down to their side; this will keep the tape in place under the arms. Then step back and see if the tape runs straight across the back, that it is neither too high nor too low in the centre of the back.

Now measure down the centre of the back, from where the garment should come at the back of the neck, to the top of the tape, as shown in the illustration by line 9. This will give the depth of scye, which means the depth of the armhole. Much care is necessary in taking this measure.

NUMBER 10. THE OVER SHOULDER MEASURE.

Place the square up close under the arm, and measure from the top of the square, just back of the armhole, up over the shoulder and down to the top of the square, just in front of the armhole, as shown in the illustration by line 10.

NUMBER 11. THE FIRST BALANCE MEASURE.

Tie a plumb bob, or other small weight, to the end of a string twenty-four inches long, and tie the other end of the string to the centre of a tape about the same length. Suspend this weight, or plumb, under the arm as shown in the illustrations, by tying the two ends of the tape together over the shoulder.

Now see that the person being measured stands in a natural attitude, neither stooping nor over erect. The plumb line, when pressed into the form at the waist, locates the under-arm seam, and it may be located well to the front of the armhole, or farther back as suits the fancy, but the object is to find out where the under-arm seam should be located, at the bust line, at the waist line, and at the hip line.

Having located the plumb line at its proper place, proceed to take the balance measures as follows:

Place the end of the tape at the plumb line, close up under the arm, and measure from the plumb line to the centre back, which will give the first balance measure. This measure tells how far it is from the centre back to the under-arm seam; or in other words, how much of the bust measure is in the back of the garment, and is shown by line 11.

NUMBER 12. THE SECOND BALANCE MEASURE.

Press the plumb line in to the waist, keeping it straight up and down; then measure from the plumb line, at the waist, on the waist line, to the centre-back, as per line 12. This tells how many inches of the waist measure are in the back of the garment, and is called the second balance.

On an erect form this measure will be short, while in stooping form it will be long; in fact, that is the object of the balance measures—to tell whether the form is stooping, erect, or over erect.

NUMBER 13. THE THIRD BALANCE MEASURE.

Take the third balance from the plumb line, five inches below the waist line to the centre-back, keeping the tape five inches below the waist line. (See line 13 in illustration.)

This measure is taken very loose, it being part of the hip measure, which is taken loose. This measure tells how much of the hip measure is on the back of the garment, the remainder being on the front of the garment.

The object of these balance measures is to tell how much of the waist measure belongs with a certain portion of the bust measure; and also to tell how much of the hip measure belongs with that portion of the bust.

These thirteen measures comprise the principal measures for the body of a garment; but there are three secondary measures as follows:

NUMBER 14. THE HEIGHT OF DART.

Measure from the centre of the neck in front, straight down the centre front to the brow of the bust. This will give the height of dart.

This measure is part of number 7, which is the *length of front.*

NUMBER 15. THE LENGTH OF BACK.

Measure from the back of the neck straight down the centre back to the cord at the waist. This will give you the length of back.

NUMBER 16. THE WIDTH OF SHOULDERS.

Measure straight across the back, from point to point of shoulders, at the shoulder seams. This will give the width of shoulders, and will vary according to the prevailing styles.

MEASURES FOR THE SLEEVES.

NUMBER 1. THE ARMHOLE MEASURE.

This measure is taken from the diagram, by measuring the armhole in the same, and adding the desired fullness.

NUMBER 2. THE SLEEVE LENGTH.

Put the short arm of the square up close under the arm, letting the arm hang down to the side, and measure down to the *wrist-joint*. Always draft the sleeve to this length, and then shorten or lengthen to suit the style wanted.

NUMBER 3. THE ELBOW MEASURE.

Take the elbow measure around the point of the elbow, when the arm is folded, holding the tape as tight or as loose as the garment is wanted.

NUMBER 4. THE HAND MEASURE.

Take the hand measure with the fingers extended, as one would put their hand into a close sleeve, measuring over the full part of the hand.

A secondary measure may also be taken—from close up under the arm down to the elbow, it being part of the sleeve length; but this measure is seldom used, and may be dispensed with if the other measure is properly taken.

Too much care cannot be exerted in taking the measures, and especially in the depth of scye and the under-arm measures.

Be careful not to get the under-arm too long. If you do, the garment will never be satisfactory in the fit, while if the under-arm is too short, it is easily fitted.

On the balance measures, as their name would imply, the balance of the garment depends, and you cannot have a worse garment than one that is out of balance, for it cannot be fitted.

If the balance measures are not taken correctly, there will arise complications that will not only puzzle the beginner, but they are now the perplexities of the old designers and fitters.

If the second balance is taken too long, the garment will stand away from the person in the centre back, at the waist; when it is unfastened, and when fastened in front, it will stand away from the back of the neck, or have a fullness in the front just below the neck.

If the second balance is too short, there will be a draw from the back of the neck, around the front of the armhole, and from there to the waist line, in the centre of the back.

The most difficult part of this work is to take the measures, but these are not hard to take if one only applies their mind to it, and uses good judgment.

Too much stress cannot be put on the fit of garments, for you must have the fit in order to get the style. One sees garments that fit, but have no style; garments that have both style and fit, but never was a garment worn that was stylish if it did not fit.

Spend a little extra time in taking the measures correctly, and in drafting a pattern, and this time will be saved many times over in the fitting of the garment.

In drafting the diagrams in this volume, the following measures will be used, unless otherwise stated:

Number 1. The neck measure, 14 inches.
" 2. The bust measure, 36 inches.
" 3. The waist measure, 24 inches.
" 4. The hip measure, 40 inches.
" 5. The chest measure, 14 inches.
" 6. Width of back measure, 12 inches.
" 7. Length of front measure, 13 ½ inches.
" 8. The under-arm measure, 8 inches.
" 9. The depth of scye, 7 inches.
" 10. The over-shoulder measure, 12 inches.
" 11. The first balance measure, 8 ½ inches.
" 12. The second balance measure, 5 ½ inches.
" 13. The third balance measure, 10 inches.

These measures are not a standard set of measures, but are selected for the purpose of teaching, as they are easily carried out, and have but few fractions to contend with in the application of the same to the diagram.

When the pupil is well versed in drafting Diagram 1 to the above measures, it is a good plan to substitute some other measures for these, so that they may be competent to draft the diagram to any measures before taking up Diagram 2, and the same is true of each succeeding diagram.

Having learned to draft Diagram 1 to any measures, the best plan is now to take the measures of some person, and make a pattern for them, and sew it up. In this way one gets a practical application of each and every part, and they will thoroughly understand why each measure is taken, and how to take it.

By this method of work, all patterns are the size the garment should be when finished, and the needle must sew exactly where the edge of the pattern comes on the cloth. *Therefore seams must be added at all points in cutting out the goods*, and the exact amount allowed for seams must be taken in joining the several parts.

This is best done by marking on the cloth at the edge of the pattern, and allowing a seam when cutting out the goods, then by sewing on the mark, the correct size and shape of the garment is assured.

For linings and all light weight goods on which a trace mark will show, the marking should be done with a tracing wheel. But for wool goods the best plan is to mark out with French chalk, then cut out the pieces, and lay the patterns on the opposite side of the goods, and mark the other side, thus giving the marks to sew to at all points.

For stock patterns trace out each separate part with a double tracing wheel, thereby allowing seams at all points on the pattern traced out. These double tracing wheels are adjustable, so that any width of seam desired can be given to the pattern in tracing out the same.

DIAGRAM 1.

Place the corner of the square at A, and draw line 1 across the top.

Draw line 2 at right angle to line 1.

A to B is $13\frac{1}{4}$ inches.

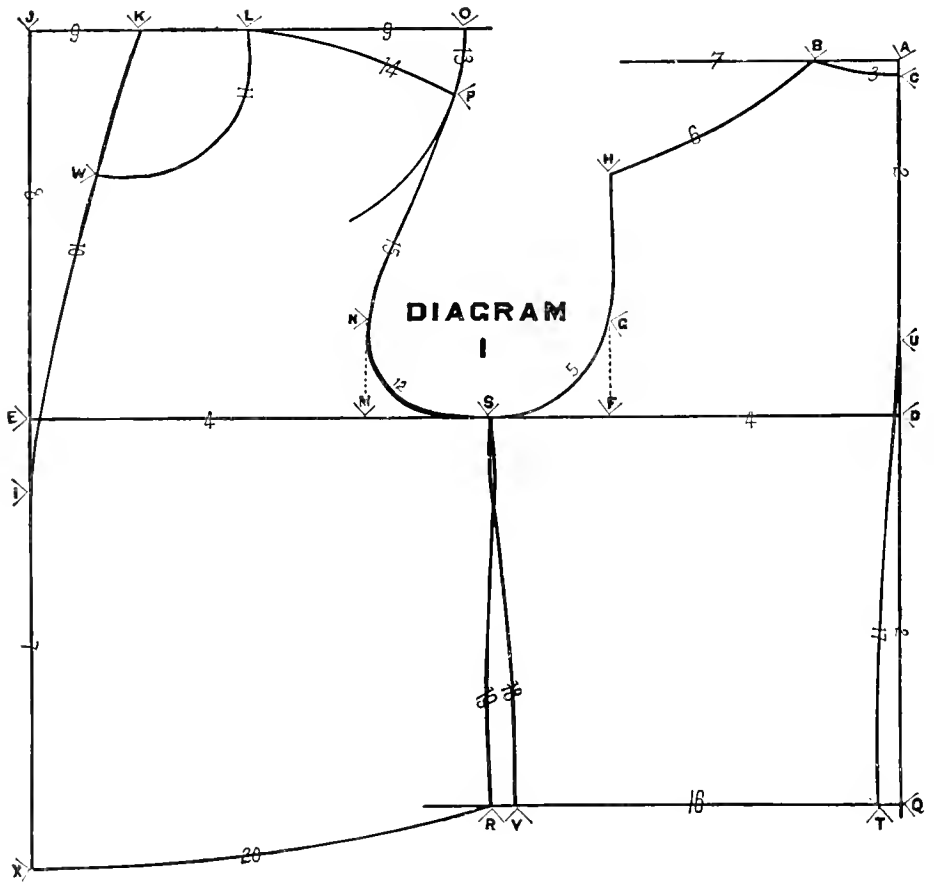

A to C is $\frac{1}{4}$ of an inch.

Draw line 3 with point N of the curve-rule at C.

C to D is the *depth* of *scye*. (7 inches for these measures.)

Draw line 4 at right angles to line 2.

D to E is $\frac{1}{2}$ of the *bust measure*. (18 inches for these measures.)

D to F is $\frac{1}{2}$ of the *width* of *back*. (6 inches for these measures.)

F to G is always 2 inches, and at right angles to line 4.

F to H is one inch less than ½ of the *over-shoulder measure*, 5 inches. (Over-shoulder is 12, divided by 2=6—1=5.)

Draw line 5 with point 11 of the curve-rule near G, touching at H and G and blending into line 4.

Draw line 6 with point A of the curve-rule at B.

Draw line 7 down from E at right angle to line 4.

E to I is 1½ inches.

Continue line 7 through E, forming line 8.

E to J is 1 inch more than the *depth* of *scye*. (8 inches for these measures.)

Draw line 9 at right angle to line 8.

J to K is 2¼ inches.

Draw line 10 with point C of the curve-rule at I.

K to L is 2¼ inches.

Draw line 11 by placing the 13/4 inch point of the neck rule (point J), at L, swinging the curve-rule until ½ of the *neck measure* (7 inches on the neck rule) touches line 10.

From B to C there is used 1¾ inches of the neck measure, and as that amount is left off from the neck rule, when we apply J at L and swing the curve-rule to ½ neck measure we have completed the neck.

E to M is ½ of the *chest measure* (7 inches).

M to N is always 2 inches, and at right angles to line 4.

Draw line 12 with point Y of the curve-rule at N, and blending into line 4.

L to O is ¼ inch less than B to H.

Sweep line 13 from O, pivoting at L.

N to P is the remainder of the *over-shoulder measure*, 5 inches.

From F to H is 5 inches; from M to N is 2 inches, and from N to P is 5 inches, which added together equal 12 inches — the amount of over-shoulder measure.

Draw line 14 with point A of the curve-rule at L.

Draw line 15 with point N of the curve-rule at N on the Diagram.

D to Q is the *under-arm measure* (8 inches).

Draw line 16 at right angle to line 2.

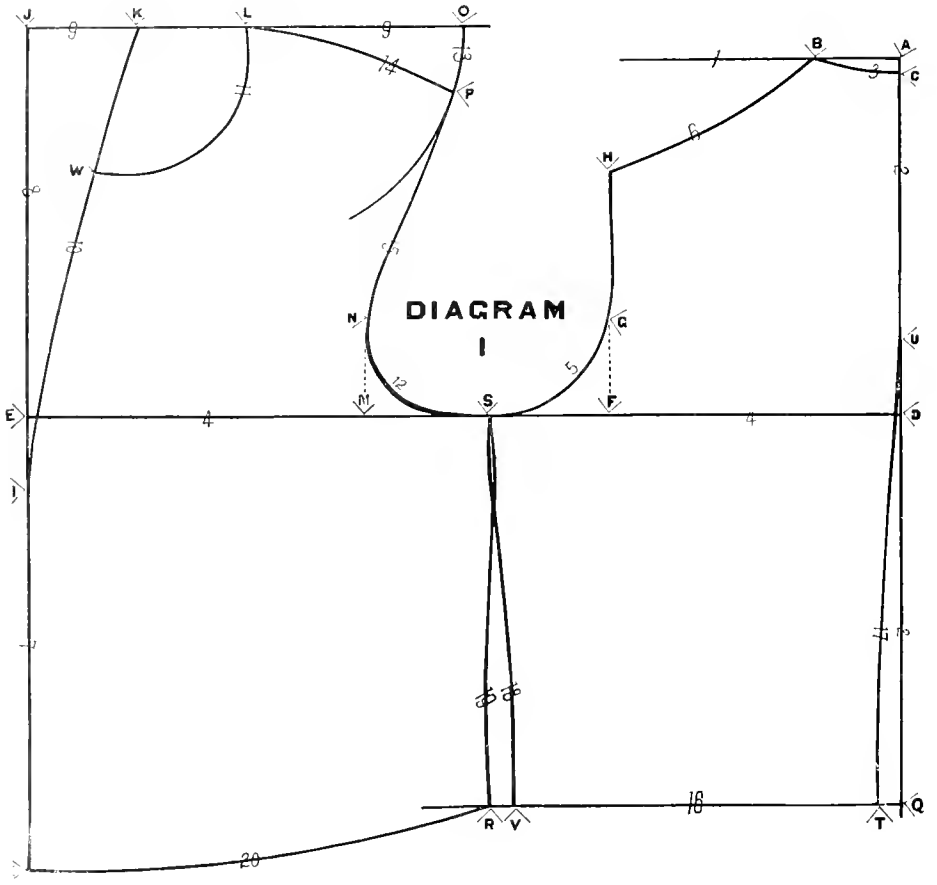

Q to R is the *first balance measure* (8 ½ inches).

D to S is the *first balance measure* (8 ½ inches).

Q to T is ½ inch.

D to U is 1 ½ inches.

Place point E of the curve-rule at T, letting it touch at D, and draw line 17 from T up to F of the curve-rule, then place point 19 of the curve-rule at U of the diagram, and draw the rest of line 17.

R to V is ½ inch.

Draw line 18 with point 15 of the curve-rule at S.

Draw line 19 with point J of the curve-rule at S.

Measure down from W the *length of front* (13½ inches) locating X.

Draw line 20 with point G of the curve-rule at X.

This diagram is the foundation of all garments that hang upon the shoulders, and too much care cannot be taken in learning it thoroughly, in order to fully understand how it is drafted.

When required to draw a line at right angle to another line, have the edge of the square exactly on the given line, so that the line drawn may form a perfect right angle, and the diagram be drawn on the square, thus insuring a perfect fit.

Having learned to draft by these given measures, you will have no difficulty in substituting for them any others you may wish.

The measurements are entirely individual, so there will be as much difference in the appearance of diagrams drawn from several sets of measures as there is in the looks of the persons measured; *i. e.*, a long depth of scye with a short over-shoulder will give a sloping shoulder, while a short depth of scye with a long over-shoulder will give a high square shoulder.

Yokes are made by cutting off the front and back in any shape desired. If the yoke be wanted in one piece, lay the shoulder line together.

DIAGRAM 2.

A to B is 1 inch, more or less, as desired.

B to C is $\frac{3}{4}$ of an inch (for these measures).

D is 1 inch above G on Diagram 1.

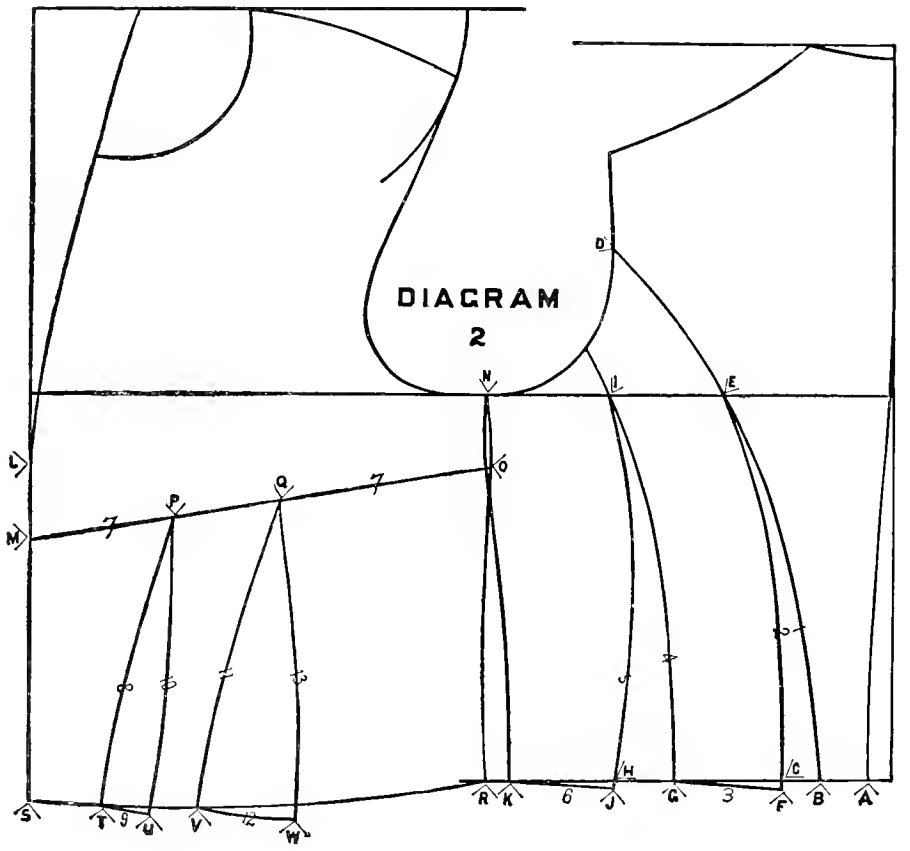

Draw line 1 with point U of the curve-rule at D, then without moving it, make a mark on the curve-rule at E, also at B, this measures the distance from E to B; now hold the rule firmly at E, and swing it over to C, and draw line 2 from E down through C, locating F the same distance from E as B is from E.

The *second balance measure* is 5 $\frac{1}{2}$ inches, and as 1 inch of it has been used (A to B), there remain 4 $\frac{1}{2}$ inches for the other two pieces—2 $\frac{1}{4}$ inches for each.

C to G is therefore 2 $\frac{1}{4}$ inches.

Draw line 3 from F to G straight.

G to H is 1 ¼ inches, leaving the remaining 2 ¼ inches of the *second balance measure* in the under-arm piece (from H to K).

Draw line 4 with point S of the curve-rule at I, then make a mark on the rule at I and G; now hold the rule firmly at I, and swing it over to H; then draw line 5 from I through H, and locate J the same distance from I as G is from I.

Draw line 6 from J to K straight.

This completes the back to the waist line.

From A to B is 1 inch; from C to G is 2 ¼ inches, and from H to K is 2 ¼ inches, which added together equal 5 ½ inches—the *second balance measure*, the amount of the waist measure required in the back of the garment, the remainder being in front of the under-arm seam.

L to M is 1 ½ inches.

N to O is 1 ½ inches.

Draw line 7 straight from M to O.

M to P is 3 inches.

P to Q is 2 ¼ inches.

Half the *waist measure* is 12 inches, and as there has been used of this amount for the back 5 ½ inches, there remain for the front 6 ½ inches. By measuring across the front from S to R, we find it to be 9 ½ inches, it is therefore 3 inches too wide, which amount must be taken out in darts.

S to T is 1 ½ inches.

Draw line 8 with point O of the curve-rule at P.

Sweep line 9 from T, pivoting at P.

T to U is 1 inch or ⅓ of the amount for darts.

Draw line 10 with point 10 of the curve-rule at P.

U to V is 1 inch.

Draw line 11 with point O of the curve-rule at Q.

Sweep line 12 from V, pivoting at Q.

V to W is 2 inches—the remaining amount for darts.

Draw line 13 with point 10 of the curve-rule at Q.

In drafting the back, it may be divided into 2, 3, 4, or more pieces, and the divisional of the same may be to suit the taste, but the total width of these pieces must equal the *second balance measure.*

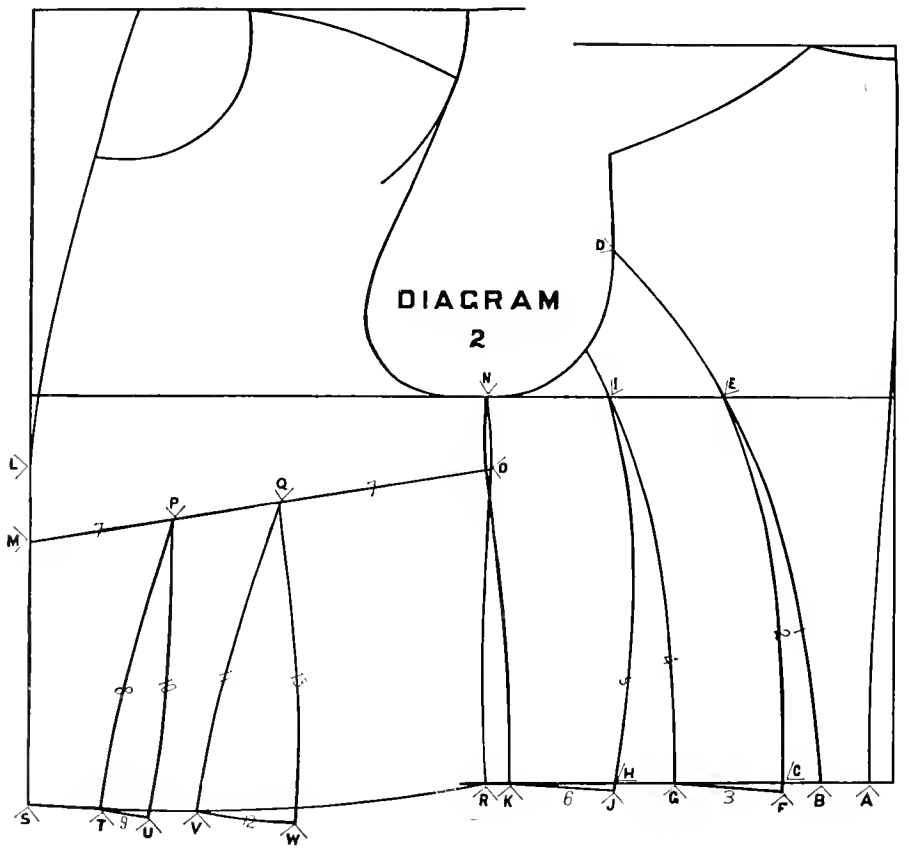

If the back be made wider than the second balance, it will stand away from the person at the waist line, in the centre back, when the garment is not fastened, and when it is fastened, there will be a fulness in the front just below the neck.

If the back be made narrower at the waist line than the second balance measure, there will be a fulness in the back just below the shoulder blades. There will also be a draw from the back of the neck down to the front of the armhole, making the garment seem tight at this point.

Lines 1 and 4 may be drawn with any curve on the rule that suits the taste, but line 2 must be the same as line 1, and line 5 the same as line 4.

Points D and I may be located as desired without changing the fit of the garment.

There may be one, two or three darts in the front, and they may be located to suit the style and design of the garment, but the amount taken out in darts is absolute, and is determined by subtracting the second balance measure from one-half the waist measure. This gives the width the front should be, and what it exceeds this amount (from S to R), must be taken out by darts.

All garments worn on the upper part of the body are based on this diagram, and if it is thoroughly understood, they can be easily drafted.

In taking out at the waist the difference between the first and the second balance measures, care and judgment should be used in the distribution of the same, so that there will not be too much depression in one place, especially in the centre back, for if too much is taken out at this point, there will be a fulness in the centre back between the shoulders.

When the difference between the *first* and *second balance measures* is less than 3 inches, take out $\frac{1}{4}$ inch at A (Q to T in Diagram 1).

In a broad-shouldered person, as well as some others, there is but little depression in the centre back, but the form tapers very much from the arm-pit to the waist. For such forms take out a small amount at A, and from B to E, while a greater proportion should be taken out from J to G, and from R to K, than is shown in this diagram.

In drafting the front for forms of this description, the amount for darts should be divided so as to make a narrow front dart, and a wide back dart.

DIAGRAM 2. FIGURE 2.

The following measures are used in this diagram in order to show some of the variations frequently made in drafting.

Neck 15, *Bust* 40, *Waist* 28, *Chest* 16, *Back* 13, *Length of Front* 14½, *Under-Arm* 7½, *Depth of Scye* 7½, *Over-Shoulder* 13, *First Balance* 10, *Second Balance* 7, *Height of Dart* 9¾, *Width of Shoulders* 15.

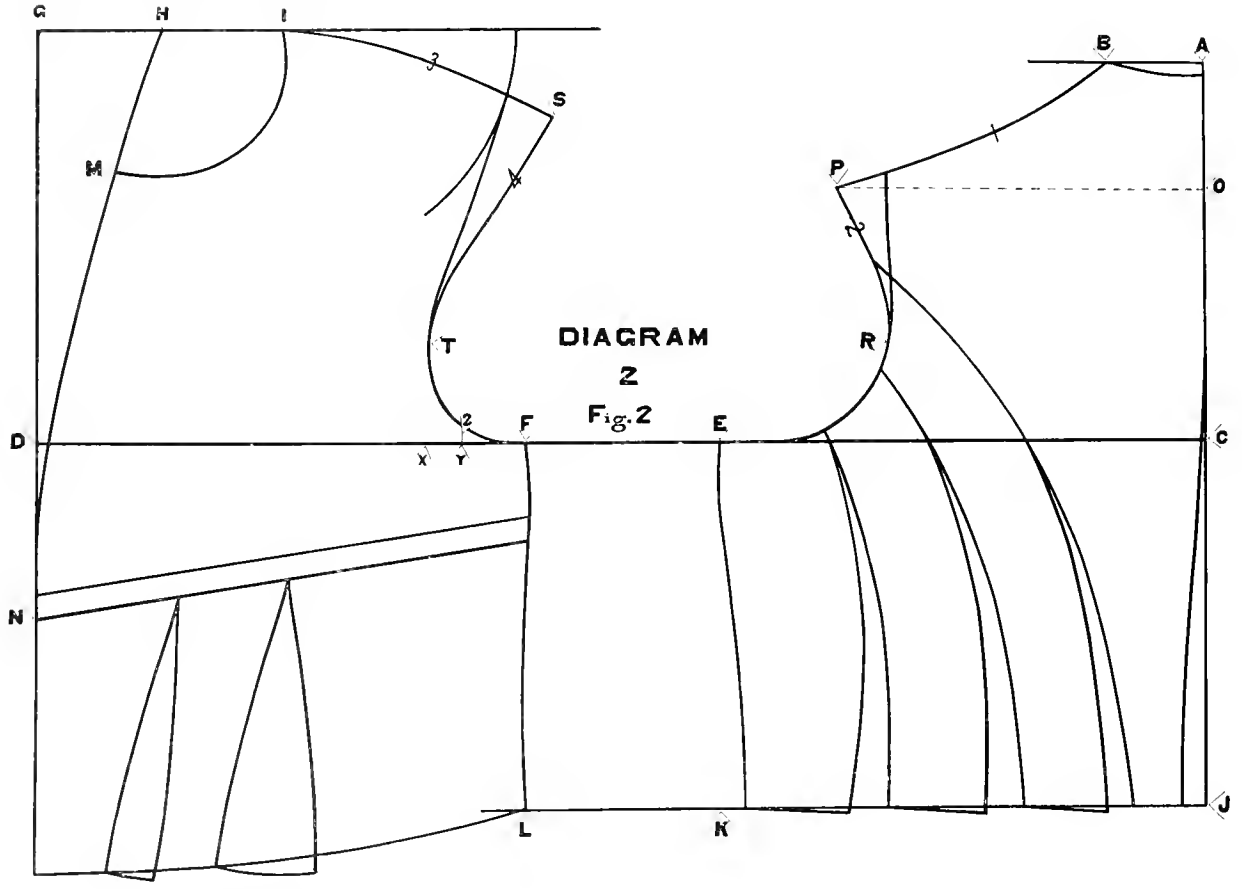

As the neck is large (15 inches), the amount of the neck on the back should be greater than for preceding measures, A to B is therefore 2 inches.

In preceding diagrams the front and back are together; hereafter they will be separated so that the under-arm lines will not cross each other.

C to D is one-half the *bust measure*, 20 inches plus 4 inches, 24 inches.

C to E is the *first balance measure*, 10 inches.

E to F is 4 inches, that amount having been added to ½ the bust measure (from C to D), in order to separate the front from the back.

G to H is one-sixth of the *neck measure*, 2 ½ inches.

H to I is one-sixth of the *neck measure*, 2 ½ inches.

While this should be one-sixth of the neck measure, it is not necessary to use difficult fractions, but make it 2 inches for small necks, 2 ¼ for medium, and 2 ½ for large.

J to K is the *first balance measure*, 10 inches.

K to L is the same as E to F (4 inches).

M to N is the height of dart, 9 ¼ inches.

Draw a straight line from N, *parallel* to the former dart line, and locate the tops of darts on this line as shown in the diagram.

Long shoulders are in style at present, and will be at different periods of time. The length of shoulder desired may be found by measuring across the back from point to point of the shoulders, and this measure is applied as follows:

Place point A of the curve-rule at B, and extend the shoulder line (line 1) as shown on the diagram.

Place the corner of the square at O with the long arm on the draft line in the centre of the back, and locate P on the line 1 one-half the width of the shoulders (7 ½ inches) from O.

Place point 12 of the curve-rule at R, and draw line 2 from R to P.

Place point A of the curve-rule at 1, and extend the front shoulder line (line 3) as shown on diagram, making the same addition to the front as was made to the back shoulder.

Draw line 4 with point N of the curve-rule at T.

In making long shoulders, do not increase the width of back at R, as it will not only produce fulness in the back, but will give the appearance of narrow shoulders.

This diagram shows the under-arm seam located well to the front of the arm-hole, and the back divided into four pieces instead of three, as heretofore. This is preferable for stout forms that are short-waisted. The pieces may be shaped to suit the taste.

X is located at the width of chest point.

X to Y is one inch.

Place the corner of the square at Y, with the long arm on the bust line, and locate Z where the short arm touches the arm-hole, and put a notch in the pattern and goods at this point. Put the inside seam of the sleeve at this notch, and it will hang correctly.

DIAGRAM 3.

A to B is 5 inches always, because the hip measure is taken 5 inches below the waist-line.

Draw line 2 at right angle to line 1.

B to C is the *third balance measure* (10 inches).

Draw line 3 with point W of the curve-rule at D.

Place the corner of the square at E, and locate F at right angle to line 4, as per dotted line.

Place the corner of the square at G, and locate H at right angle to line 5, as per dotted line.

I is centre between F and H.

Draw line 6 with point 2 of the curve-rule at E.

Draw line 7 with point W of the curve-rule at G.

Place the corner of the square at J, and locate K at right angle to line 5, as per dotted line.

Place the corner of the square at L, and locate M at right angle to line 8, as per dotted line.

N is centre between M and K.

Draw line 9 with point 2 of the curve-rule at J.

Draw line 10 with point W of the curve-rule at L.

Draw line 11 with point 2 of the curve-rule at P.

Place the edge of the square on O and P, and locate Q in a straight line with O and P, as per dotted line.

Place the edge of the square on R and S, and locate T in a straight line with R and S, as per dotted line.

R and S are duplicate points of O and P, therefore T must be a duplicate point of Q, and as there should be the same amount of swell on the back side of the front at the hip as there is on the front side of the back, *the distance from* T to U *must be the same as from* Q to C.

T to U is the same as Q to C.

Draw line 12 with point W of the curve-rule at S.

Place point 16 of the curve-rule at V, touching at W, and draw line 13

W to X is 5 inches always, as the *hip measure* is taken 5 inches below the *waist-line*.

Place point G of the curve-rule at X, and draw line 14 through T to line 12.

Half the *hip measure* is 20 inches, and as 10 inches of this amount has been used in the back (B to C), there remain 10 inches for the front. By measuring line 14, it is found to be 13 ½ inches, which is 3 ½ inches *too wide*—this amount must be taken out in darts.

Draw line 15 through the centre of the dart locating Y.

Draw line 16 through the centre of the other dart locating Z.

Y to (a) is $\frac{1}{2}$ inch.

Draw line 17 with point W of the curve-rule at (b).

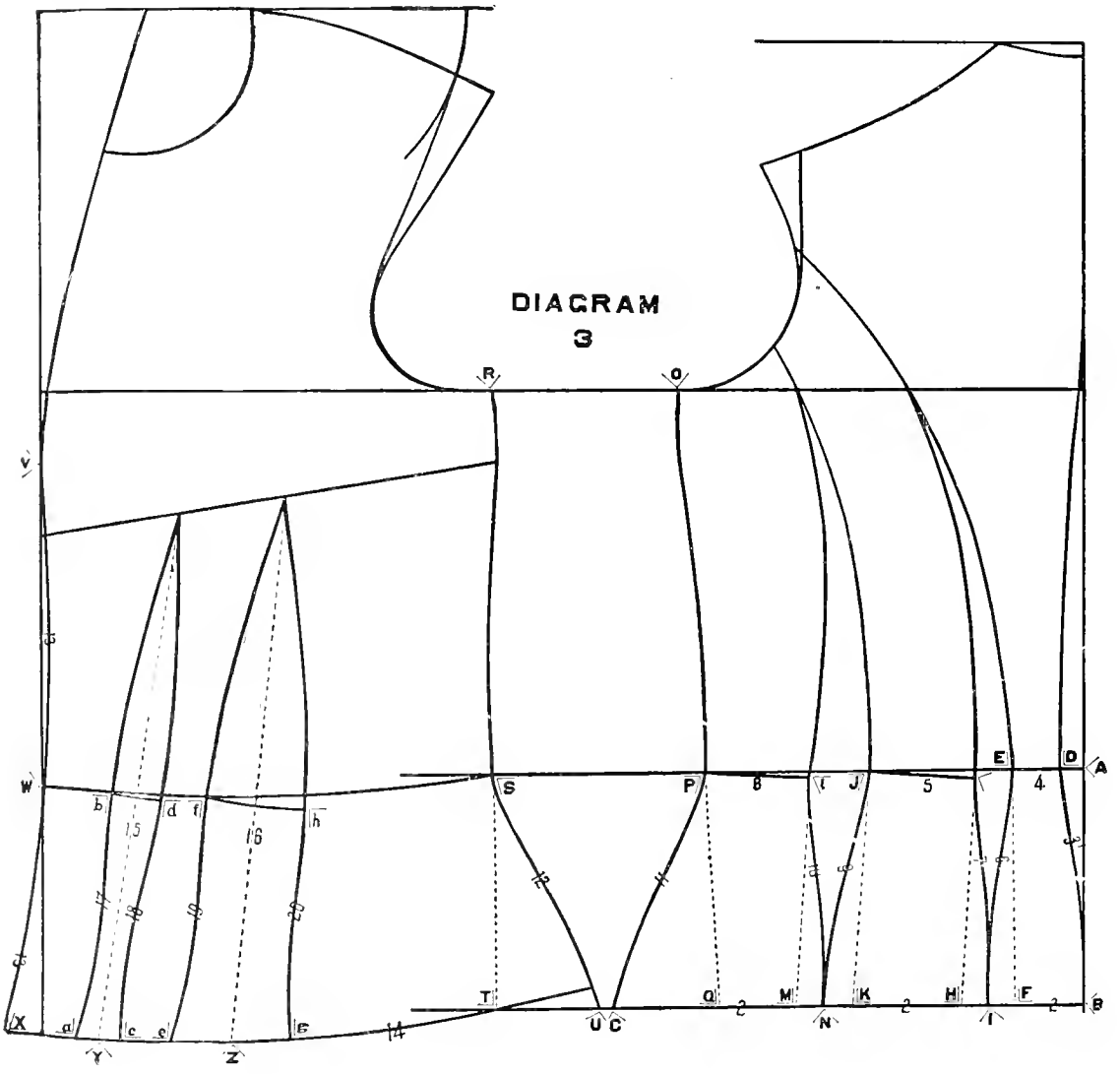

Y to (c) is $\frac{1}{2}$ inch.

Draw line 18 with point 2 of the curve-rule at (d).

There were $3\frac{1}{2}$ inches for darts, and having used 1 inch (a to c) in the first dart, there remain $2\frac{1}{2}$ inches for the second dart.

Z to (e) is $1\frac{1}{4}$ inches.

Draw line 19 with point W of the curve-rule at (f).

Z to (g) is 1 ¼ inches.

Draw line 20 with point 2 of the curve-rule at (h).

Lines 4, 5 and 8 are the waist lines, and should always be kept on a *lengthwise* thread of the goods in cutting the *lining*; but on a *crosswise* thread of the goods in cutting the *outside*.

Notches should be cut in the pattern, and the goods at D, E, G, J, L, P and S, and these notches must be kept together in joining the separate pieces of the garment, both in the lining and the outside goods.

If these points are not kept together, the garment cannot fit, and without these notches it is impossible to tell how it should go together.

The third balance measure should be taken very loose, and if it should be too long, it is easily remedied; but if too short, it is a bad defect, and will produce a fulness in the back dart at the hip line. In an ordinary form the third balance will be 1 ½ inches longer than the first balance measure.

Do not get the back too wide, as it will not only wrinkle when the shoulders are thrown back, but will make the garment appear tight across the chest.

If the chest is too wide, the garment will appear tight across the back when the arms are thrown forward, and the garment will break in front of the arm-hole.

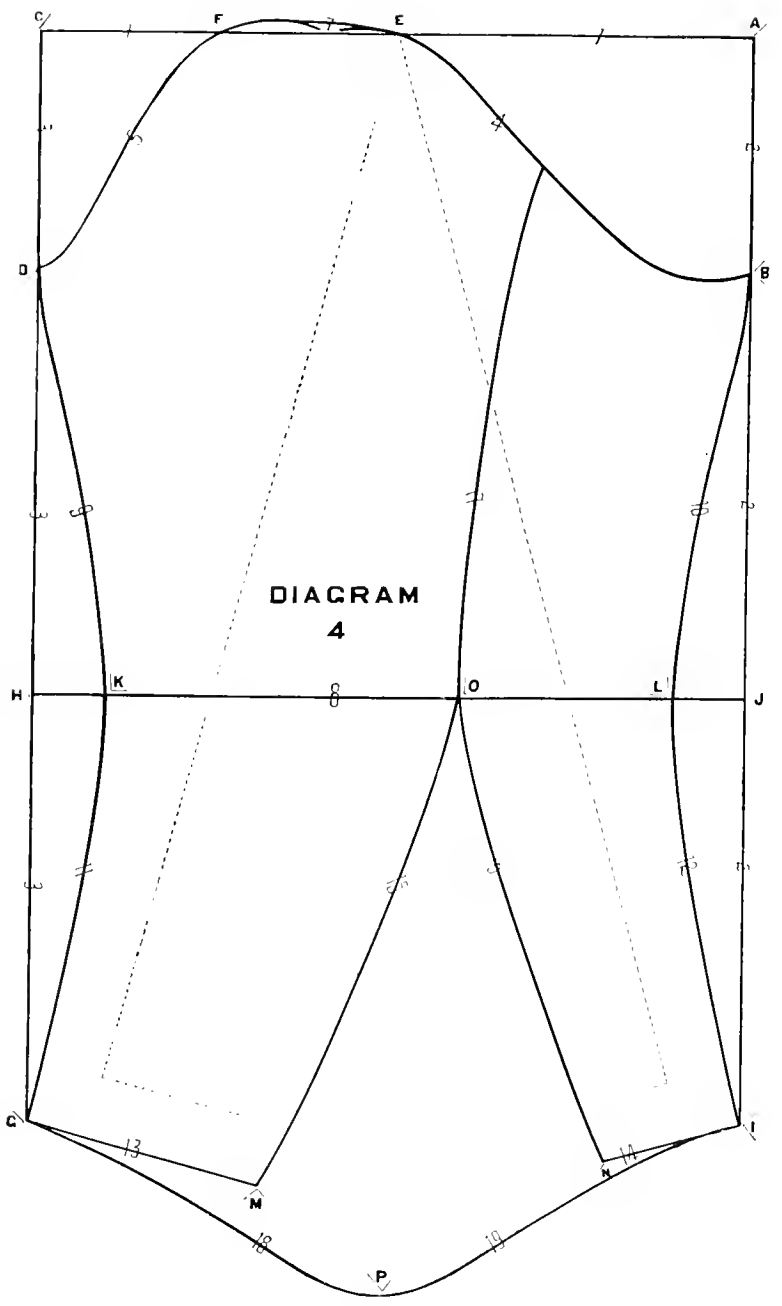
C
F
E
A
D
B
DIAGRAM
4
H
K
O
L
J
G
M
N
I
P

DIAGRAM 4.

SLEEVE.

Measure the arm-hole of the pattern for which the sleeve is to be drafted, and to this amount add the desired fulness, the sum will be the size of the arm-hole measure used in drafting the sleeve; *i. e.*, if the arm-hole of the pattern is 17 inches, and if 3 inches will give the fulness for the effect desired, the sleeve must be drafted to a 20-inch arm-hole measure.

The following are the measures used in this diagram:

Arm-hole 20 inches. *Sleeve length* 18 inches. *Elbow* 12 inches. *Hand* 8 inches.

Place the corner of the square at A, and draw line 1 straight.

Draw line 2 at right angle to line 1.

A to B is *one-fourth* of the *arm-hole measure* (5 inches for these measures).

A to C is the *remainder* of the *arm-hole measure* (15 inches).

Place the corner of the square at C, and draw line 3 at right angle to line 1.

C to D is *one-fourth* of the *arm-hole measure* (5 inches, the same as A to B).

E is in the centre between A and C.

F is in the centre between E and C.

Place point L of the curve-rule at B, letting it touch at E, and draw line 4 from B up to point Q of the curve-rule; then reverse the rule, and place point M of the curve-rule at E, and draw the rest of line 4 through E to line 1.

Place point 12 of the curve-rule at F, letting it touch at D, and draw line 5 from point 8 of the curve-rule through F to line 1.

Place point X of the curve-rule at D, and draw the rest of line 5.

Draw line 7, which joins lines 4 and 5, with point R of the curve-rule midway between the two lines, blending it to the highest points of both.

D to G is the *sleeve length* (18 inches).

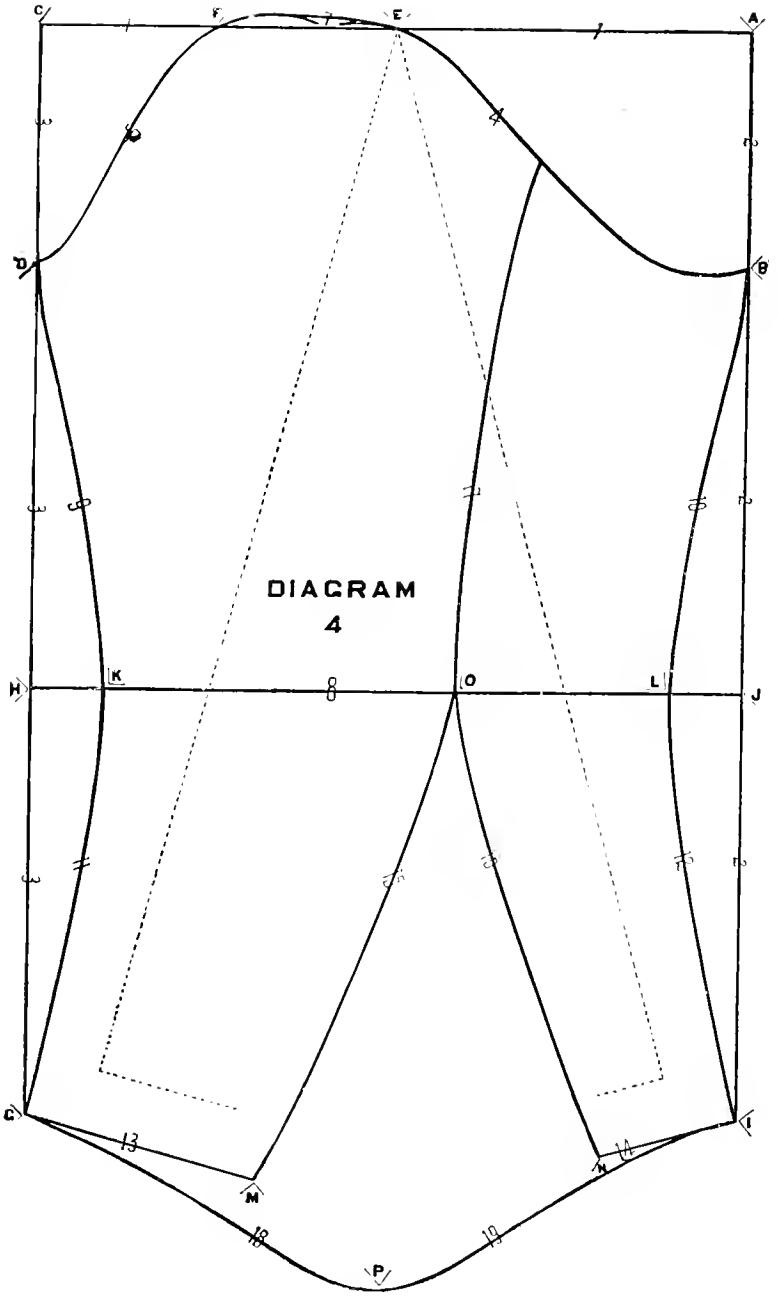
C
F
E
A
D
B
DIAGRAM
4
H
K
O
L
J
G
M
N
I
P

H is the centre between D and G.

B to I is the *sleeve length* (18 inches).

J is the centre between B and I.

Draw line 8 from H to J straight.

H to J is 15 inches, and as the *elbow measure* is 12 inches, there are 3 inches to be taken out—one-half on each side.

H to K is therefore 1 ½ inches.

J to L is the same, 1 ½ inches.

Draw line 9 with point 15 of the curve-rule at D.

Draw line 10 with point J of the curve-rule at B.

Draw line 11 with point C of the curve-rule at K.

Draw line 12 with point 22 of the curve-rule at L.

Place the corner of the square at G, with the long arm running up; hold the inside edge of the long arm in line with point E (as shown by dotted lines), and draw line 13 with the short arm.

Place the corner of the square at I, with the long arm running up; hold the inside edge in line with point E (as shown by dotted lines), and draw line 14 with the short arm.

G to M is 1 inch *more* than *one-half* of the *hand measure* (5 inches).

I to N is 1 inch *less* than *one-half* of the *hand measure* (3 inches).

K to O is *one-half* of the *elbow measure* (6 inches) plus 1 ½ inches (7 ½ inches).

Draw line 15 with point C of the curve-rule at O.

Draw line 16 with point 22 of the curve-rule at O.

Draw line 17 with point 22 of the curve-rule on line 4 at any point you may prefer the seam to be located.

To make a one-piece sleeve with fulness at the back of the cuff, draw lines 13 and 14 past the centre of the diagram, and locate point P three inches straight below where they cross.

Draw line 18 with point M of the curve-rule at P.

Draw line 19 with point 12 of the curve-rule at P.

If more width be desired at the hand, draw a line from E to P, and cut the pattern in two on this line. Spread the pattern apart at P, keeping it together at E until the desired size is produced at the hand.

Any sleeve worn may be produced by this diagram. As an illustration, cut on line 12 from I to L, then on line 8 to O, then down on line 16 to N, and from there to I on line 14. Place point N at M, letting line 16 rest on line 15, and you will have a sleeve with a dart at the elbow in the under-arm piece.

In the leg of mutton sleeve, another illustration of variations is given. By cutting out the upper and under sleeve, and placing points M and N together, letting line 16 rest on line 15, the top of the sleeve will be increased, forming a sleeve with a large top, but fitting closely at the elbow and hand.

Take the sleeve length from close up under the arm to the wrist joint, and draft the sleeve to this length, putting the elbow in the centre; then lengthen or shorten to style of sleeve desired, or depth of cuff to be attached.

Do not draft a short or a long sleeve, and then put the elbow in the centre; but draft it to the actual length, and then shorten or lengthen as desired.

In taking measures and drafting patterns, avoid getting the back and chest too wide, as it will make a small arm-hole, which will have to be trimmed out, leaving the sleeve with not enough fulness.

The sleeve should be fulled into the garment at all parts of the arm-hole, but when long shoulders are worn, only a little fulness is wanted at the top, but the sleeve should be quite full in front and back of the arm-hole.

When short shoulders are in style, and it is desired to have the sleeve stand up above the shoulder, give more length to the top of the sleeve by making the distance from A to B and from C to D more than $\frac{1}{4}$ of the arm-hole measure, and making A to C the remainder.

Individuals having the same bust measure may require different sizes and shapes of arm-hole; *i. e.*, a person with a round form and narrow shoulders will have a narrow chest and back, giving a wide arm-hole, and one having broad shoulders will have a wide chest and back, making a narrow arm-hole. At the same time the arm-holes may be the same size, one being narrow and deep, while the other is wide and shallow.

The sleeve should be drafted to the shape of the arm-hole by varying the portion of the arm-hole measure that is used from A to B, making it greater for the deep arm-hole, and less for the shallow.

Instead of drawing line 4 through E, the upper part of that line may be drawn to a point one-half inch or more from E, thereby giving more width to the top of the sleeve; a similar variation may be made at F, giving still more width to the top. By an opposite variation with lines 4 and 5, the top of the sleeve may be made narrow.

To insure a correct hanging sleeve, there should be a notch at the top of the sleeve (which is the centre between E and F), and this notch should be kept at the top of the arm-hole (which is at T on Diagram 5), while the inside seam of the sleeve should be placed at Z, as shown in Diagram 2, Figure 2.

The notch at the top of the sleeve is very essential in putting tucks and plaits in sleeves, as it shows where to locate the same in order that they may come to the top of the arm-hole of the garment.

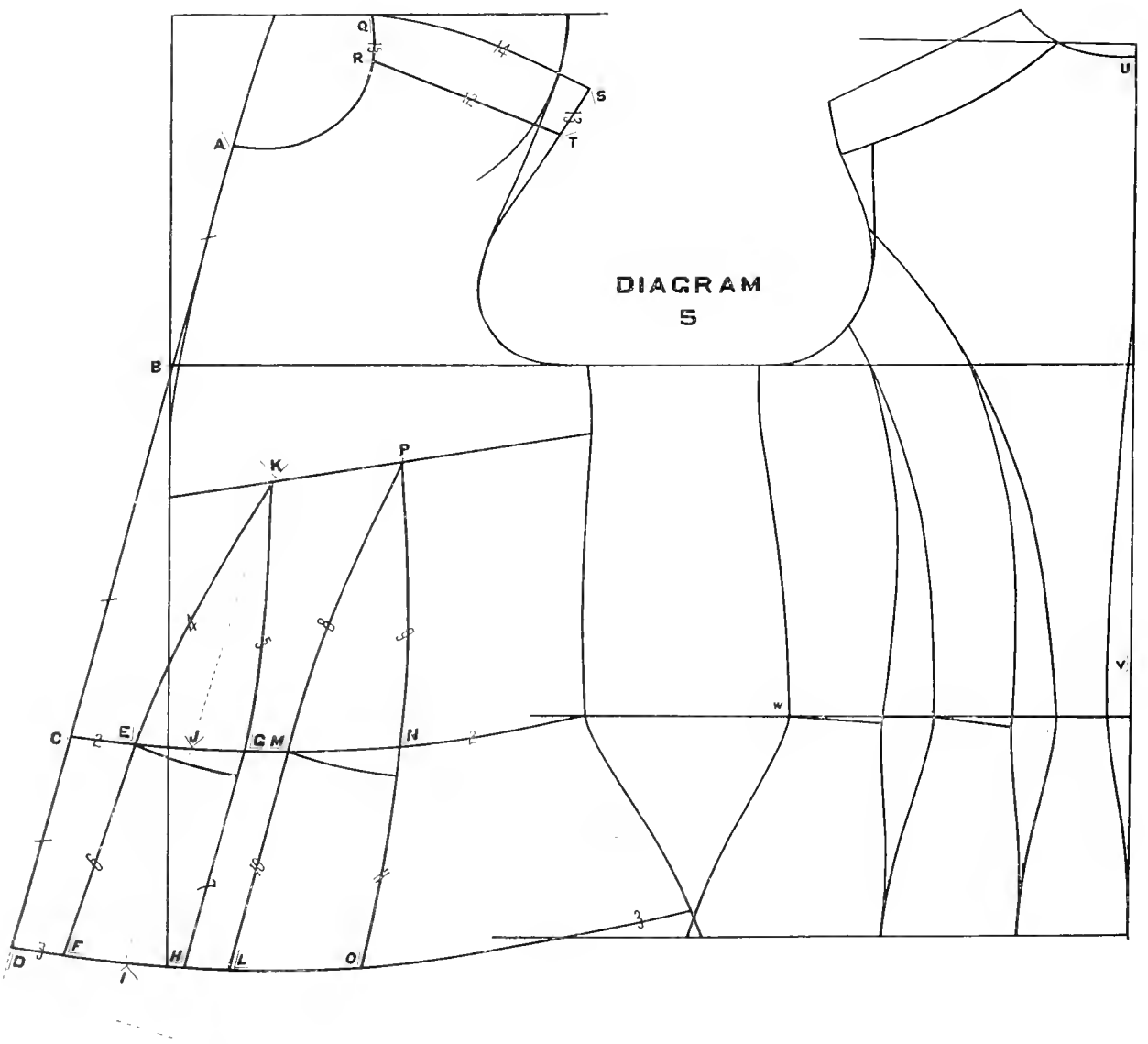
DIAGRAM
5
Q
R
S
T
A
B
K
P
C
E
G
M
N
D
F
H
L
O
I
U
V
W

DIAGRAM 5.

STRAIGHT FRONT WAIST.

This diagram is intended to meet the demand for a straight front waist, for forms that are flat in front, and for the straight front corset, and should not be adopted for general use, as the average form has a depression in the centre front, at the waist line, which will give more or less trouble, while Diagram 3 will give a smooth-fitting garment.

This diagram is also used for a French bias dart, and when that effect is wanted, the front dart should be narrow and the back dart wide.

Draw line 1 straight from A through B.

A to C is the *length of front* (14 inches).

Draw line 2 with point G of the curve-line at C.

C to D is 5 inches.

Draw line 3 with point G of the curve-rule at D.

C to E is 1 ½ inches.

D to F is 1 ¼ inches.

One-half of the waist measure is 12 inches, and as the second balance is 5 inches, that amount of the waist measure has been used in the back, leaving the remainder, 7 inches, as the width the front should be. Measuring across the front on line 2, it is found to be 12 inches; it is therefore 5 inches too wide, and this amount must be taken out in darts.

E to G is ½ the amount for darts (2 ½ inches), more or less, if desired.

D to H is the same as C to G (4 inches in this case).

I is the centre between F and H.

J is the centre between E and G.

Place the edge of the square on I and J, and locate K, as per dotted line.

Draw line 4 with point O of the curve-rule at K.

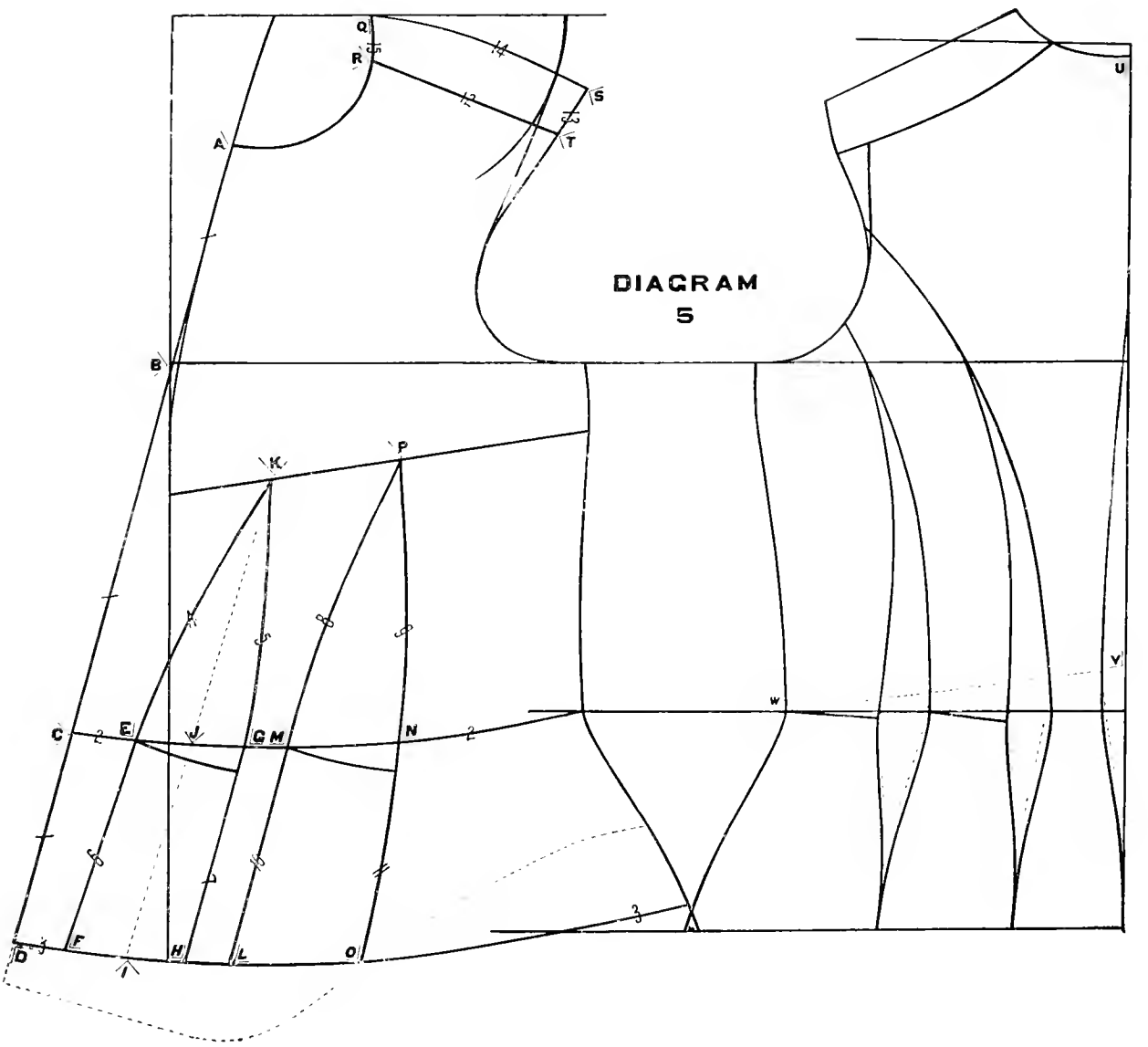
DIAGRAM
5
Q
R
S
T
A
B
K
P
C
E
J
G M
N
D
F
H
L
O
I
U
V
W

Draw line 5 with point 10 of the curve-rule at K.

Draw line 6 from E to F straight.

Draw line 7 straight.

H to L is 1 inch (more or less, as desired).

G to M is the same as H to L.

M to N is the remainder of the amount for darts ($2\frac{1}{2}$ inches for these measures).

One-half the hip measure is 20 inches, and as the third balance is 10 inches, that amount of the hip measure has been used in the back, leaving 10 inches as the width the front should be. Measuring through on line 3, it is found to be 16 inches; it is therefore 6 inches too wide, which amount must be taken out in darts.

Having used of this amount $2\frac{3}{4}$ inches (from F to H), there remain $3\frac{1}{4}$ inches for the other dart.

L to O is therefore $3\frac{1}{4}$ inches.

K to P is 3 inches (more or less, as desired).

Draw line 8 with point 0 of the curve-rule at P.

Draw line 9 with point 10 of the curve-rule at P.

Draw line 10 from M to L straight.

Draw line 11 with point C, D or E, blending into line 9.

It is sometimes preferable to have the seam on top instead of at the back of the shoulder. In such cases proceed as follows:

Q to R is 1 inch.

S to T is $1\frac{1}{4}$ inches.

Draw line 12 from R to T straight.

Cut through on lines 12, 13, 14 and 15, and add this piece to the back, as shown in the diagram.

When there is a difference between the length of back and the combined depth of scye and under-arm measures (as in these measures the length of back is 14, while the depth of scye 7 added to the under-arm 8 equals 15), make the following changes:

U to V is the length of back, 14 inches.

Draw a straight line from V to W, and with points 2 and W of the curve-rule draw lines from this sloping waist line down to the hip line, as shown by dotted lines in the diagram.

Should the length of back be greater than the combined depth of scye and under-arm measures, the variation will be similar, V being below instead of above the regular waist line.

The waist line notches are placed as in previous diagrams, and the original waist lines must be kept on the straight of the goods.

Diagram 5 is also used for shirt-waists by placing line 1 on the straight of the goods, and leaving the amount for darts as a fulness.

Extra length is added to give the blouse in the front, as shown by dotted lines, and may be varied to suit prevailing styles.

When gathers are wanted at the neck, proceed as follows:

Place the corner of the square at A, and draw a line at right angle to line 1. Measure out on this line from A the amount that is to be gathered into the neck, and from this point draw a line parallel to line 1; also draw a line from this point to where the gathers will begin at the side of the neck, cutting the pattern on this line to prevent wrinkles running from the neck to the arm-hole.

This back may be used for a shirt-waist by gathering it at the waist line the amount that would be taken out by the darts, thereby making the distance from under-arm seam to under-arm seam twice the second balance measure. This is best done by cutting a tape to twice the second balance measure plus two seams, and gathering the back at the waist line onto this tape.

Line 12 being on the top of the shoulder, if the top of the sleeve be placed at T, an extension may be made to the top of the sleeve to run up to the neck, and this addition to the sleeve may be formed into any design that the fancy may dictate.

Line 12 will also assist in designing yokes which have points running out over the sleeve, as it shows the angle at which they should run in order to lay on the top of the sleeve, or meet other designs on the same.

DIAGRAM 6.

A TIGHT FITTING BACK IN ONE PIECE.

Draft a tight-fitting back in the regular manner as shown in Diagram 2, and cut out the pieces; place the pieces together at the bust and waist lines, and re-shape the arm-hole, as shown by dotted lines in illustration.

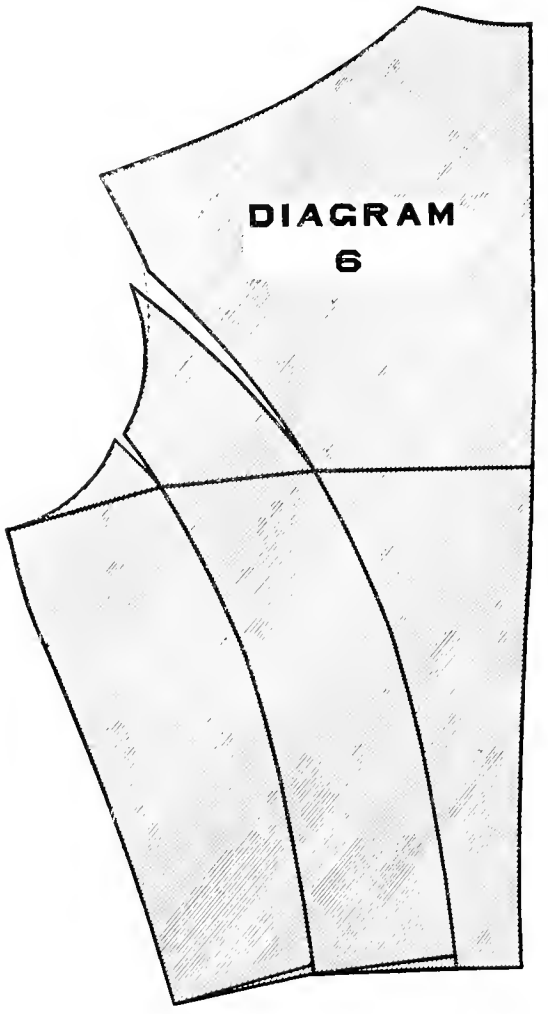

Lay the centre back on a fold of the paper at the neck and waist points, and mark all around the pattern. Cut the folded paper on these lines, and you will have a tight-fitting back in one piece.

If a back is wanted with a small amount of gathers at the waist, in the centre back, place the centre back piece on the fold of the paper, at the neck, and ½ inch

from the fold at the waist line; this will give 1 inch for gathers in the centre back, at the waist line.

Do not try to draft a tight-fitting back by taking out in the centre back and at the under-arm seam the difference between the first and the second balance measures, as it will not fit, for the following reasons: By putting the pieces together at the waist line, the arm-hole has changed shape, and is lower at the under-arm seam, and the waist line is curved instead of straight; but when the garment is put together they will have resumed their original position, thereby holding the garment in at the waist line in the back, which would not be the case if the pattern were drafted by taking the suppression out in the centre back and at the under-arm seam.

By cutting out the pieces, and placing them together, as in illustration, the same effect is obtained as if the pieces were sewed together, except that there is a slight fulness back of the arm-hole, which is really no objection, as it squares up the figure and prevents a round-shouldered effect.

Do not put gathers at the waist except where there is a surplus of goods, as gathers are for the same purpose that darts are put between the pieces, and must not be put into the back except where darts would be put into the same in order to produce a tight and smooth fit.

The centre back and the side body may be cut together, and the under-arm piece cut separate, if desired.

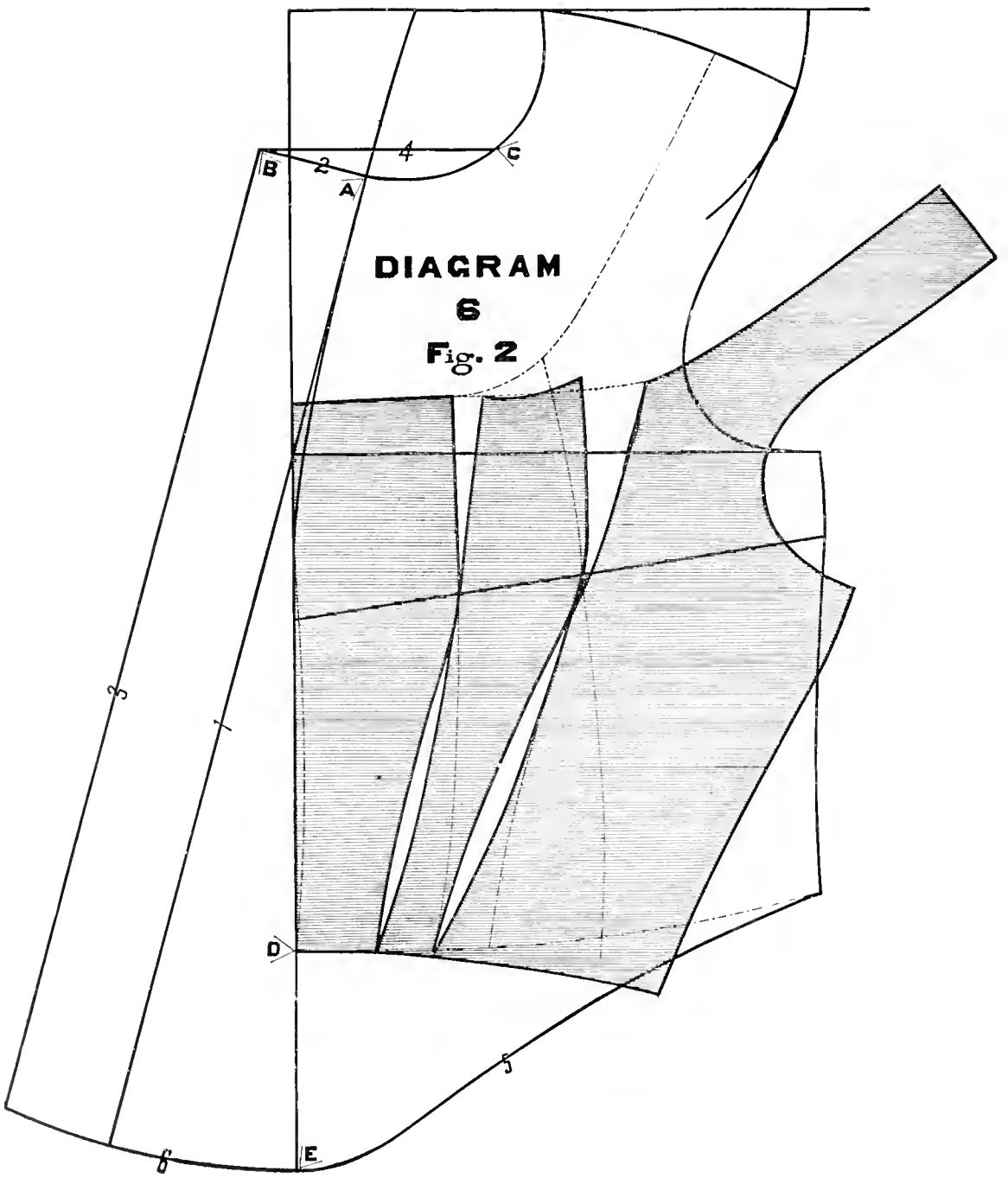
DIAGRAM
6
Fig. 2
B
A
C
D
E
1
2
3
4
5
6

DIAGRAM 6. FIGURE 2.

A TIGHT FITTING FRONT WITHOUT DARTS.

This diagram shows the front of a corset cover, and further illustrates the variations that can be made in drafting.

Draft a tight-fitting waist pattern, and cut out all around the neck, as shown by the dotted lines; then cut the front from the darts up to the top of the pattern; place the pieces together at the top and bottom of the darts, and shape the top of the pattern as shown in illustration.

This will give a tight-fitting front with the exception that it will have a fulness above the bust, which should be gathered at the top.

Many styles of corset covers may be made from the waist patterns by simple variations, similar to this illustration.

There is also shown in this diagram the change necessary for a shirt waist with fulness gathered into the neck band.

Draw line 1 straight.

Draw line 2 at right angle to line 1.

A to B is the amount that is to be fulled in at the neck.

Draw line 3 parallel to line 1.

Locate C where the gathers should begin at the neck.

Draw line 4 from B to C straight, and cut the pattern on this line, thus preventing wrinkles running from the neck to the arm-hole.

D to E is twice the amount of blouse wanted.

Draw line 5 with point 12 of the curve-rule at E.

Sweep line 6, pivoting at A.

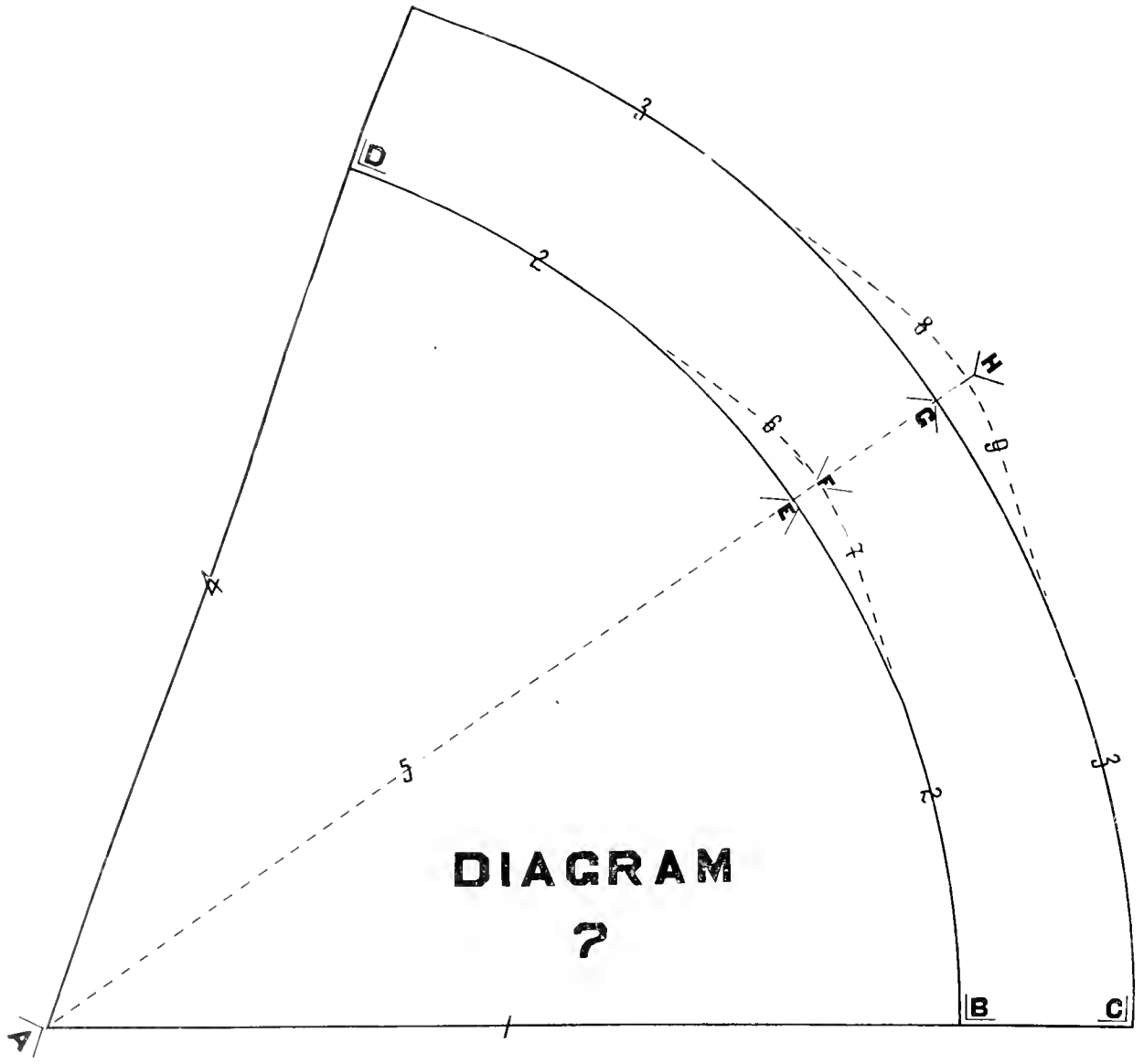

DIAGRAM 7

DIAGRAM 7.

COLLAR.

Draw line 1 straight.

A to B is three-fourths of the *neck measure*. (10½ inches for these measured.)

B to C is the height of collar, 2 inches (more or less, as desired).

Sweep line 2 from B, pivoting at A.

Sweep line 3 from C, pivoting at A.

Measure around from B on line 2, one inch *less* than the *neck measure* (13 inches for these measures), establishing D.

Draw line 4 from A through D to line 3.

This diagram gives a perfectly round or regular collar.

If one should be desired lower in front, proceed as follows:

E is centre between B and D.

Draw dotted line 5 from A through E, as shown on the diagram.

E to F is $\frac{3}{8}$ of an inch.

Draw dotted line 6 with point 11 of the curve-rule at F.

Draw dotted line 7 with point N of the curve-rule at F.

G to H is $\frac{3}{8}$ of an inch (more if desired).

Draw line 8 with point 11 of the curve-rule at H.

Draw line 9 with point N of the curve-rule at H.

Lines 8 and 9 may be drawn with any curve desired, and the distance from G to H varied to suit the taste.

To make a straighter collar for a slim, long neck, A to B should be a greater distance, say the full neck measure, and for a very short neck A to B should be one half of the neck measure.

DIAGRAM 8.

TURN-DOWN COLLAR.

Draw line 1 straight.

A to B is one-half of the neck measure, plus one-half inch. (7 ½ inches for this measure).

Draw line 2 at right angle to line 1.

A to C is 2 inches always.

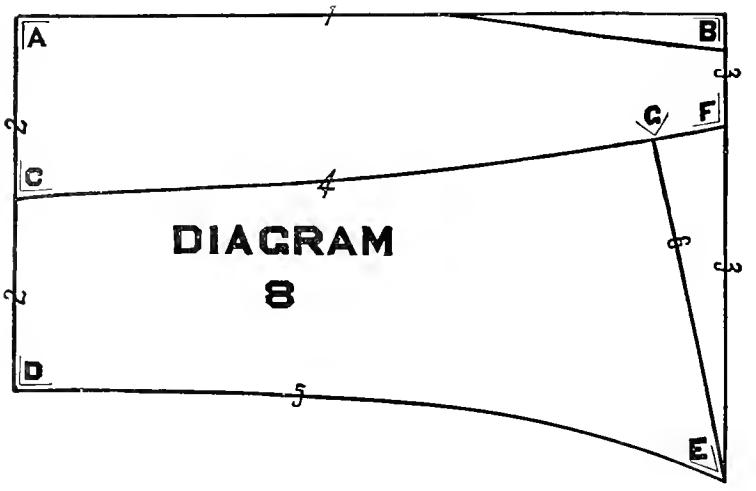

C to D is 2 inches (more or less, as desired).

Draw line 3 at right angle to line 1.

B to F is 1 ¼ inches always.

Draw line 4 from C to F with point 1 of the curve-line at C.

B to E is 5 inches (more or less, as desired).

Draw line 5 with point 6 of the curve-line at E.

F to G is ¾ inch (more, if desired).

Draw line 6 straight from G to E.

This diagram shows one-half of the collar, and if line 2 be placed on a fold of the paper, the whole collar may be cut.

Line 5 may be drawn with any curve desired, and the point of the collar at E may be shaped to suit the taste.

This collar is in one piece, but may be made with the band separate by cutting through on line 4.

The band may be narrowed in the front, or it may be narrowed all the way around, but should be drafted as in diagram.

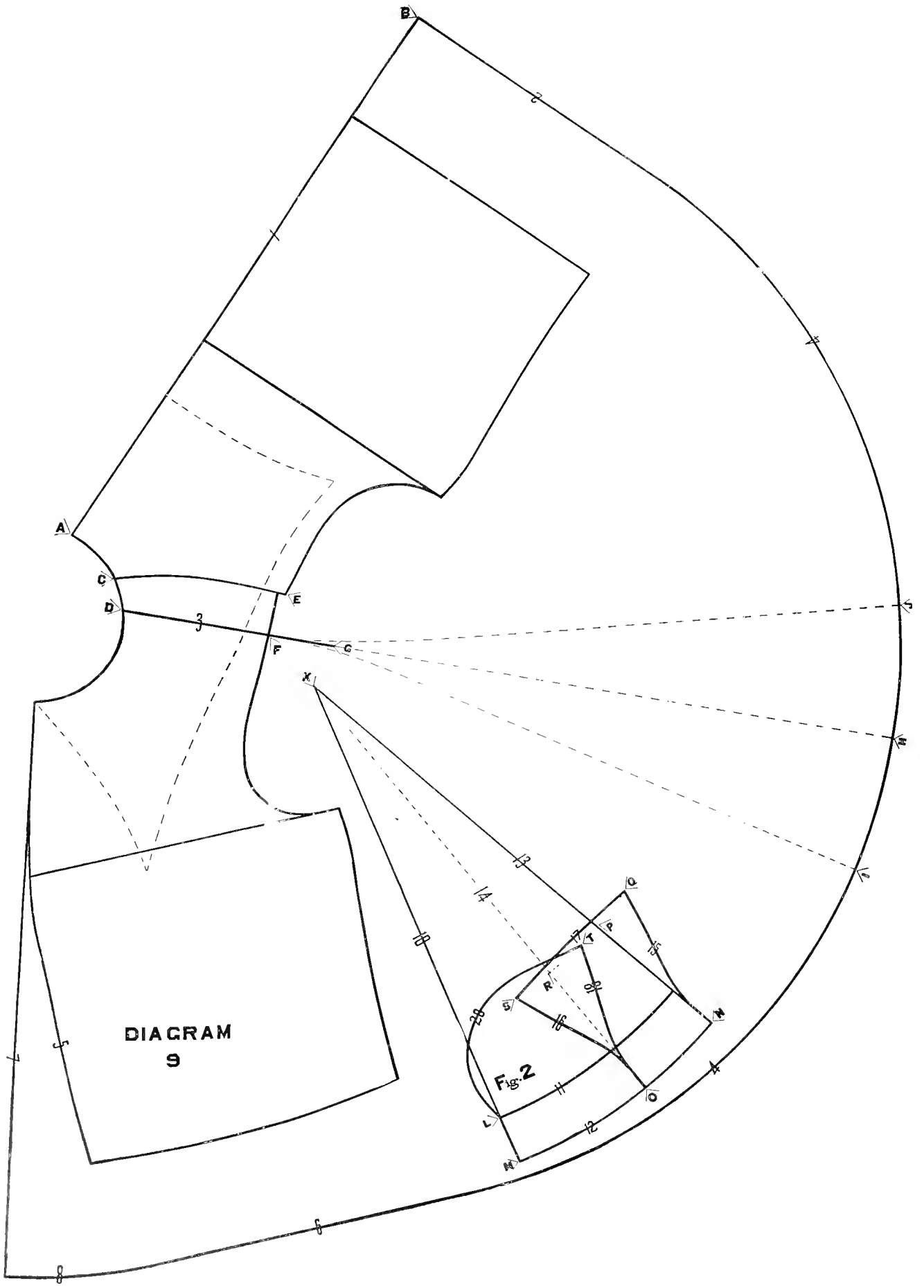
DIAGRAM
9
Fig. 2

DIAGRAM 9.

CAPES.

Draft front and back to the measures of the person for whom the cape is to be made

Cut them out, and place shoulder lines together, as shown on diagram.

A to B is the length of cape in back.

Draw line 2 at right angle to line 1.

C to D is 1 inch.

E to F is 1 ¼ inches.

Draw line 3 from D through F.

F to G is 2 inches.

Pivot at G, and sweep line 4 from where it blends into line 2, around to the front, as shown on diagram.

Put the long arm of the square on line 5, and draw line 6 at right angle to line 5, blending into line 4.

Draw line 7 from the neck down, as shown on diagram.

Pivot at neck in front, and sweep line 8 from where it will blend into line 6, over to line 7.

Place line 1 on the fold of the goods, and this will give a regular military cape. If more fulness in the back be desired, place A on the fold of the goods, and place B one inch or more from the fold.

If a cape fitting closely on the sides be desired, proceed as follows:

Extend line 3 through G straight to line 4, establishing H.

H to I is 4 inches (more or less as desired).

Draw a straight line from I to G.

Place point C of the curve-rule at F, and draw a line down to where it will blend into the line just drawn.

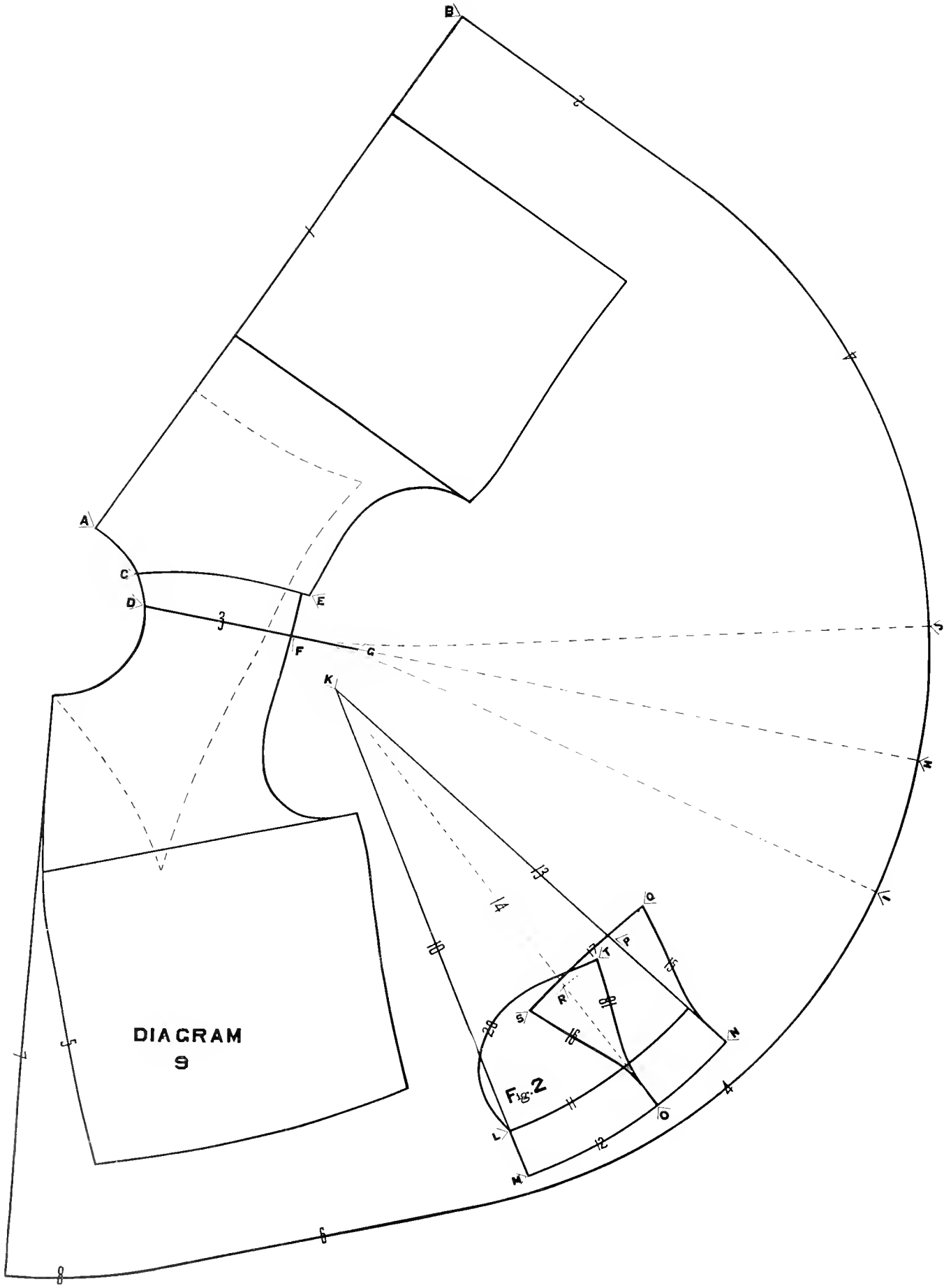

Fig. 2

H to J is the same as H to I.

Draw a straight line from J to G.

Place point 22 of the curve-rule at F, and draw a line down to where it will blend into the line just drawn.

This will make a dart from the bottom up to F at the shoulder.

To make a cape without this dart at the bottom, but with one on the shoulder, cut the pattern from I up the dotted line to F, and then on line 3 to D. Place point I on J, letting the dotted lines meet up to G, thus forming a dart from D to G.

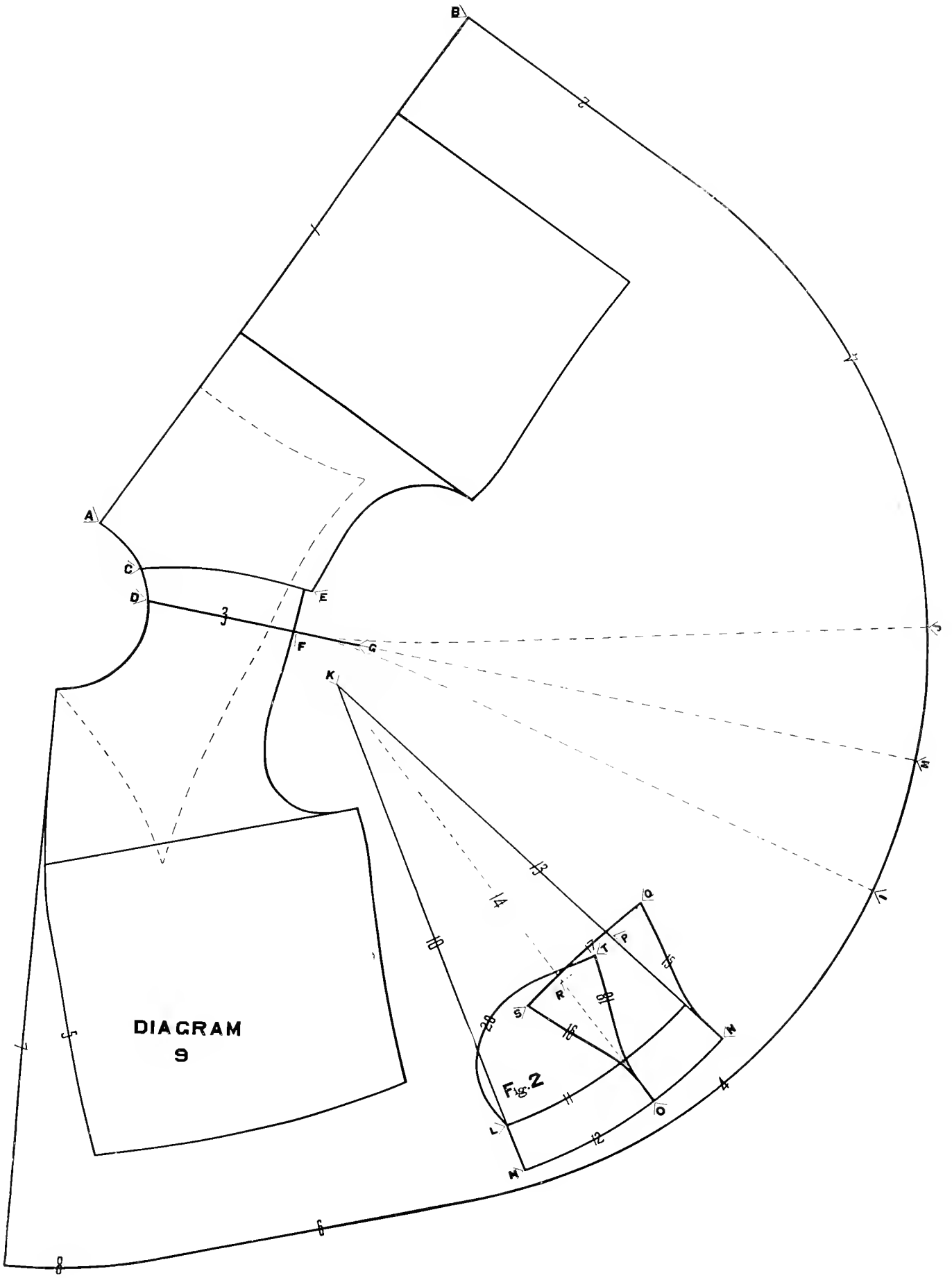
B
A
C
D
E
F
G
K
O
P
T
R
S
N
L
M
DIAGRAM
9
Fig. 2

DIAGRAM 9. FIGURE 2.

ROLL COLLAR.

Draw line 10 straight.

K to L is the neck measure—14 inches.

L to M is 1 ½ inches.

Sweep line 11 from L, pivoting at K.

Sweep line 12 from M, pivoting at K.

M to N is one-half of the neck measure—7 inches.

Draw line 13 straight from K to N.

N to O is the same as A to D on the cape.

Draw line 14 straight from K to O.

N to P is the height of collar—4 ½ inches.

P to Q is 1 ¼ inches at right angles to line 13.

Draw line 15 with point N of the curve-rule on line 13.

O to R is the height of collar—4 ½ inches.

R to S is 1 ¼ inches, at right angles to line 14.

Draw line 16 with point 11 of the curve-rule on line 14.

Draw line 17 with point R of the curve-rule at S.

R to T is the same as R to S.

Draw line 18 with point N of the curve-rule on line 14.

Draw line 20 with point J of the curve-rule at L.

By increasing the distance from P to Q, from R to S, and from R to T, the collar will have more roll, and by diminishing the distance, it will have less.

A sailor collar is shown by the dotted lines.

It may be varied to any shape desired.

COATS, JACKETS AND OTHER OUTSIDE GARMENTS.

Take the measure for outside garments in the same manner as for other garments, and make the following changes:

Add 1 ½ inches to the *bust* measure.

Add 1 inch to the *waist* measure.

Add 1 inch to the *hip* measure.

Add ½ inch to the *chest* measure.

Add ½ inch to the *width of back*.

Add ¼ inch to the *depth of scye*.

Add ¾ inch to the *over shoulder*.

Add 1 ½ inch to the *elbow measure*.

Add 1 inch to the *hand measure*.

Subtract ¼ inch from the *under arm measure*.

In drafting coats the same principles are used as for a waist, and the measures are applied in the same manner, except that the amount for darts is generally taken out in one dart instead of two; and in the back at the waist line the center back piece is made somewhat wider for coats than for waists.

Use a fine but firm piece of linen canvas in the front of a coat, and stiffen the bust with a piece of hair-cloth, thus insuring the coat holding shape.

In selecting canvas for a coat, care should be exercised in procuring a piece that will not *soften* when dampened and put under the iron, but will become *stiff*, thus allowing of proper working of the coat in pressing.

Do not make a coat too tight fitting, but let it hang smooth and reasonably loose from the shoulders, making sure that it is well balanced; that is, that it hangs in the same manner when buttoned or unbuttoned.

The balance of a garment is wholly in the balance measures, and if they are taken correctly and applied as per instructions given in this work, the result must be a *perfect, balanced garment*.

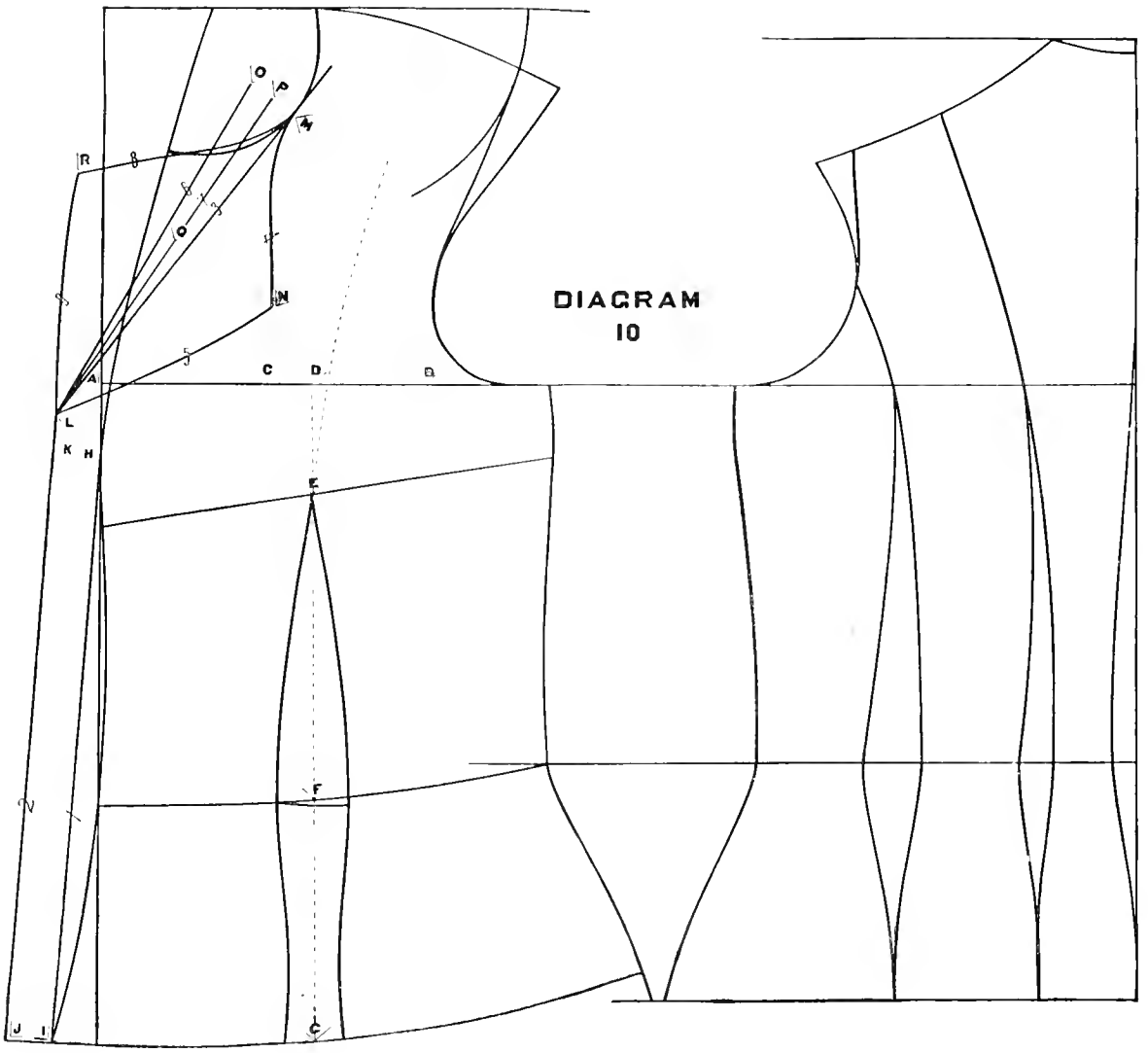
DIAGRAM
10
O
P
M
R
N
A
C
D
B
L
K
H
E
F
G
J
I

DIAGRAM 10.

DESIGN FOR A HALF FITTING, FLY FRONT COAT, WITH LAPEL.

C is the centre between A and B (B is the width of chest point).

C to D is 1 inch, but may be more or less if desired.

Square down from D, establishing E, F and G.

There are 3 inches for dart, but for a half-fitting coat only 1 1/2 inches should be taken out, namely, 3/4 of an inch on each side of F.

There are 2 1/2 inches for dart on the hip line, but for a half-fitting coat 1/2 of this amount may be left in by taking out 5/8 of an inch on each side of G.

Draw line 1 from H to I straight.

I to J is 1 inch.

H to K is 1 inch.

Draw line 2 from J through K; this gives 1 inch of lap, which is called the button-stand.

The next point to establish is L, which locates the bottom of the lapel, and it may be higher or lower than is shown in diagram, as style and fancy dictate.

Draw line 3 from L straight to the neck curve on the side, extending beyond the curve to insure a perfect blending of the lines, as shown in diagram, thus establishing M, which may be higher or lower, according to the location of L.

Place point 12 of the curve-rule at M, and draw line 4 from M down toward C, locating N as desired.

Draw line 5 with point C of the curve-rule at N.

M to O is 1 1/8 inches straight over from M.

P is the centre between M and O.

Draw line 6 from O to L straight.

Draw line 7 from P to L straight.

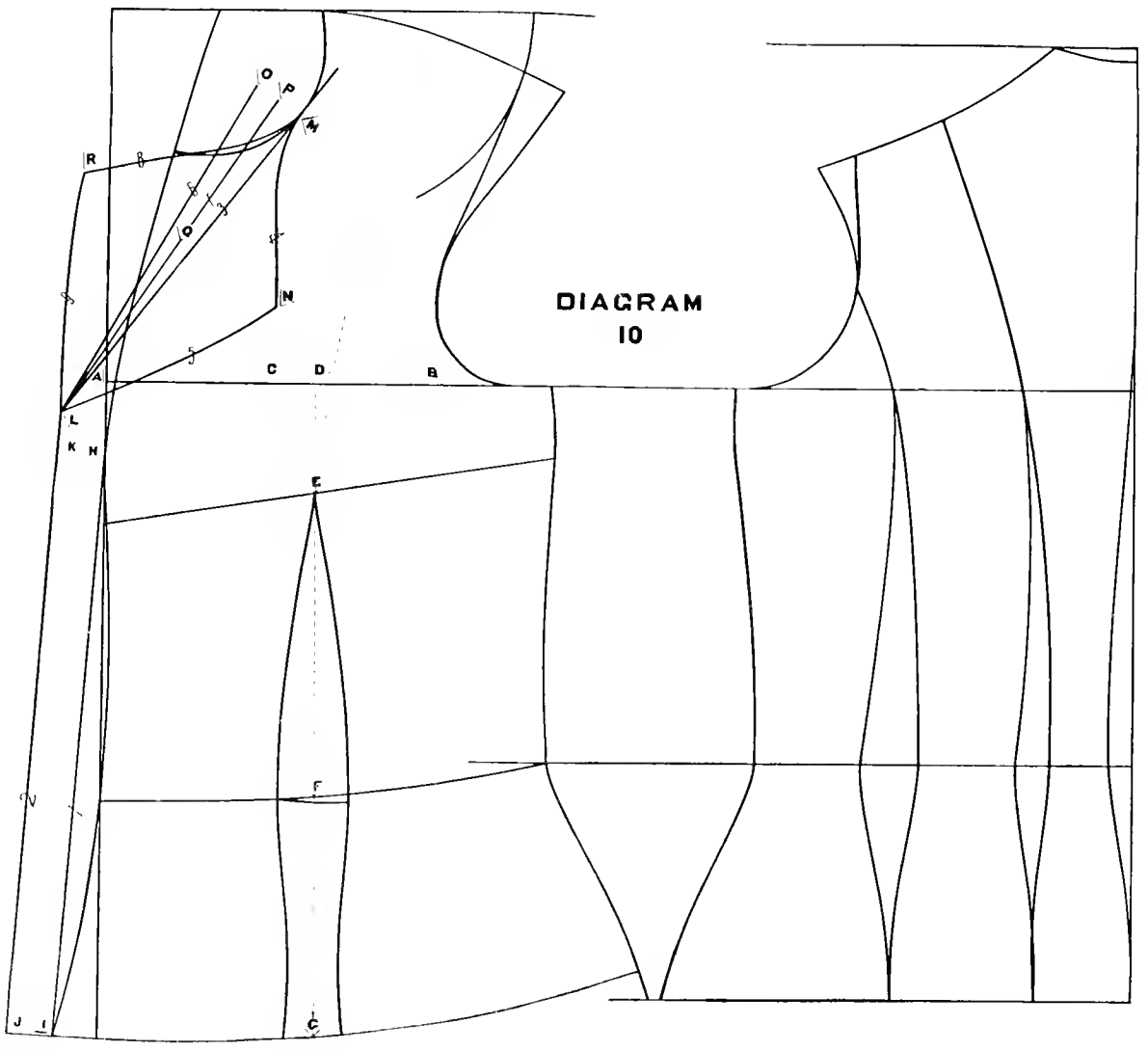
DIAGRAM
10
R
O
P
Q
N
A
C
D
B
L
K
H
E
F
J
I
G

Place the long arm of the square on line 7, with the short arm touching at N, and locate Q at the corner of the square, making the dotted line from Q to N at right angles to line 7.

Place the corner of the square at Q, with the long arm on line 7, and locate R at right angles to line 7, making the distance from Q to R the same as Q to N.

Draw line 8 with point M of the curve-rule at M on the diagram.

Draw line 9 with point 22 of the curve-rule at R.

In designing lapels, first draw line 3 from where the lapel should end to where it will blend into the neck gorge, then design it as you wish it to look when finished; then draw lines 6 and 7, after which proceed to transpose it so that when cut it will fold to where it was designed to finish, line 7 being the break line of the lapel.

In this diagram the side-body seam is extended to the shoulder, point 18 of the curve rule being used at the shoulder; in the next curve, point A of the curve-rule is used at the arm-hole to give the desired shape. This is done to illustrate some of the many curves that may be used in designing.

The dotted line on the front, running from the top of dart to shoulder, shows how the dart seam may be carried up to meet the seam of the back, point 7 of the curve rule placed at the shoulder giving the curve here illustrated.

In a half-fitting coat the full amount for dart at G may be taken out, giving a smooth-fitting coat at the hips.

A box front coat may be produced by leaving in, for fulness, the amount that would otherwise be taken out by darts.

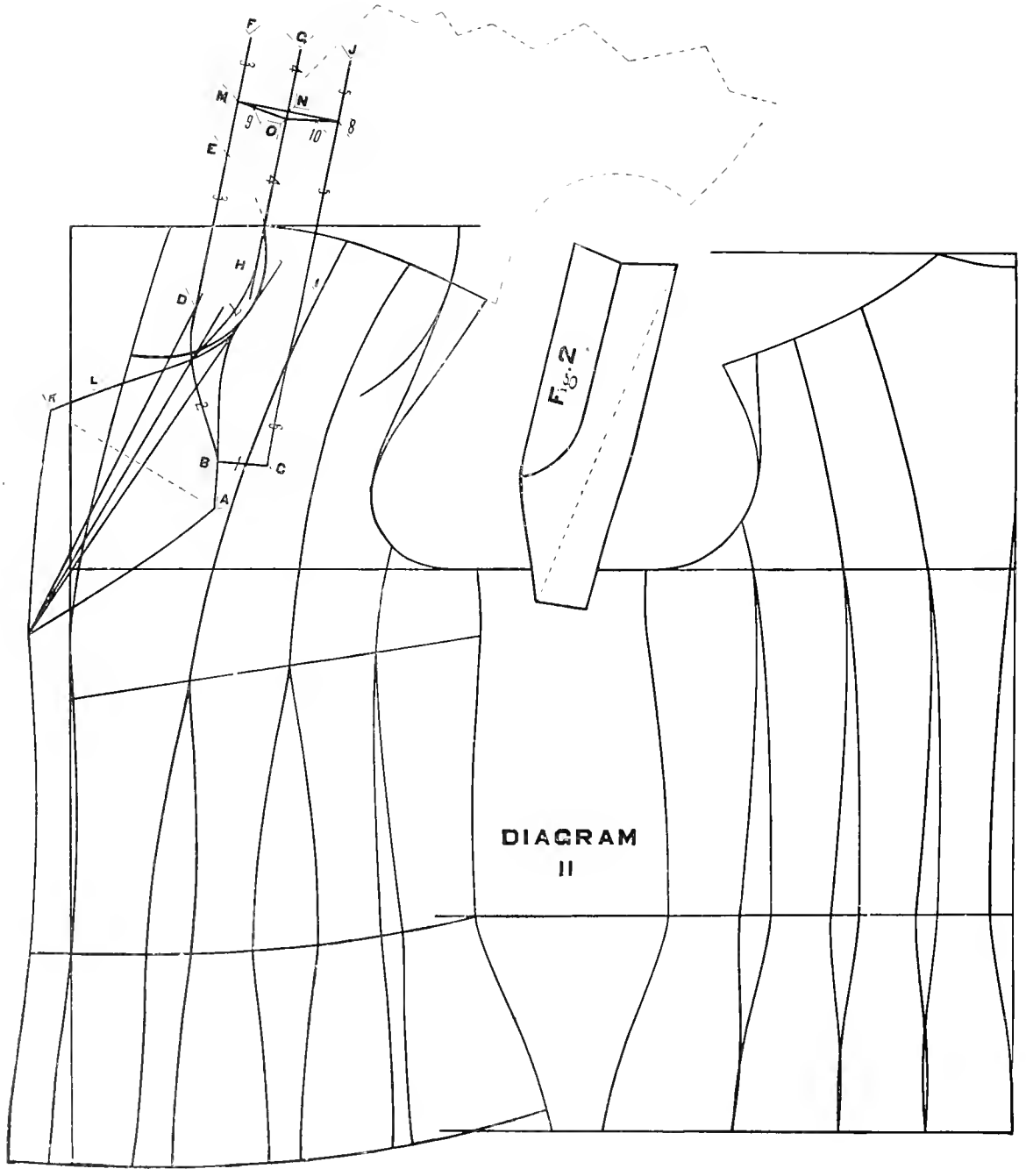
F
C
J
M
N
9
O
10
8
E
H
D
L
K
B
C
A
Fig. 2
DIAGRAM
II

DIAGRAM 11.

DESIGN FOR CORSET COAT AND COLLAR.

A to B is 1 1/8 inches.

Place the corner of the square at B, letting one arm touch at A, and draw line 1, making C 1 1/8 inches from B.

Place point 12 of the curve-rule at D, and draw line 2 from D to B.

Cut out the back, and place the shoulder lines of the front and back together, as shown by the dotted lines on the diagram, locating E.

Draw line 3 straight through E, blending into line 2.

F to G is 1 1/8 inches.

H is 1 1/8 inches from line 3.

Draw line 4 straight from H to G.

H to I is 1 1/4 inches, or width of collar.

G to J is the same as H to I.

Draw line 5 from I to J straight.

Draw line 6 with point O of the curve-rule at I.

Draw line 7 with point 10 of the curve-rule at H, letting it touch line 2 at the centre break-line (line 7 in diagram 10).

K to L is the same as A to B, 1 1/8 inches.

By measuring around the neck-gorge where the collar sews on, from L to E, it is found to be 8 1/4 inches, and as the collar should be slightly fulled on to the coat, it should be 1/4 inch longer, or 8 1/2 inches; therefore measure from B, on lines 2 and 3, 8 1/2 inches, locating M.

Draw line 8 from M at right angles to line 3.

N to O is 1/4 of an inch.

Draw lines 9 and 10 straight.

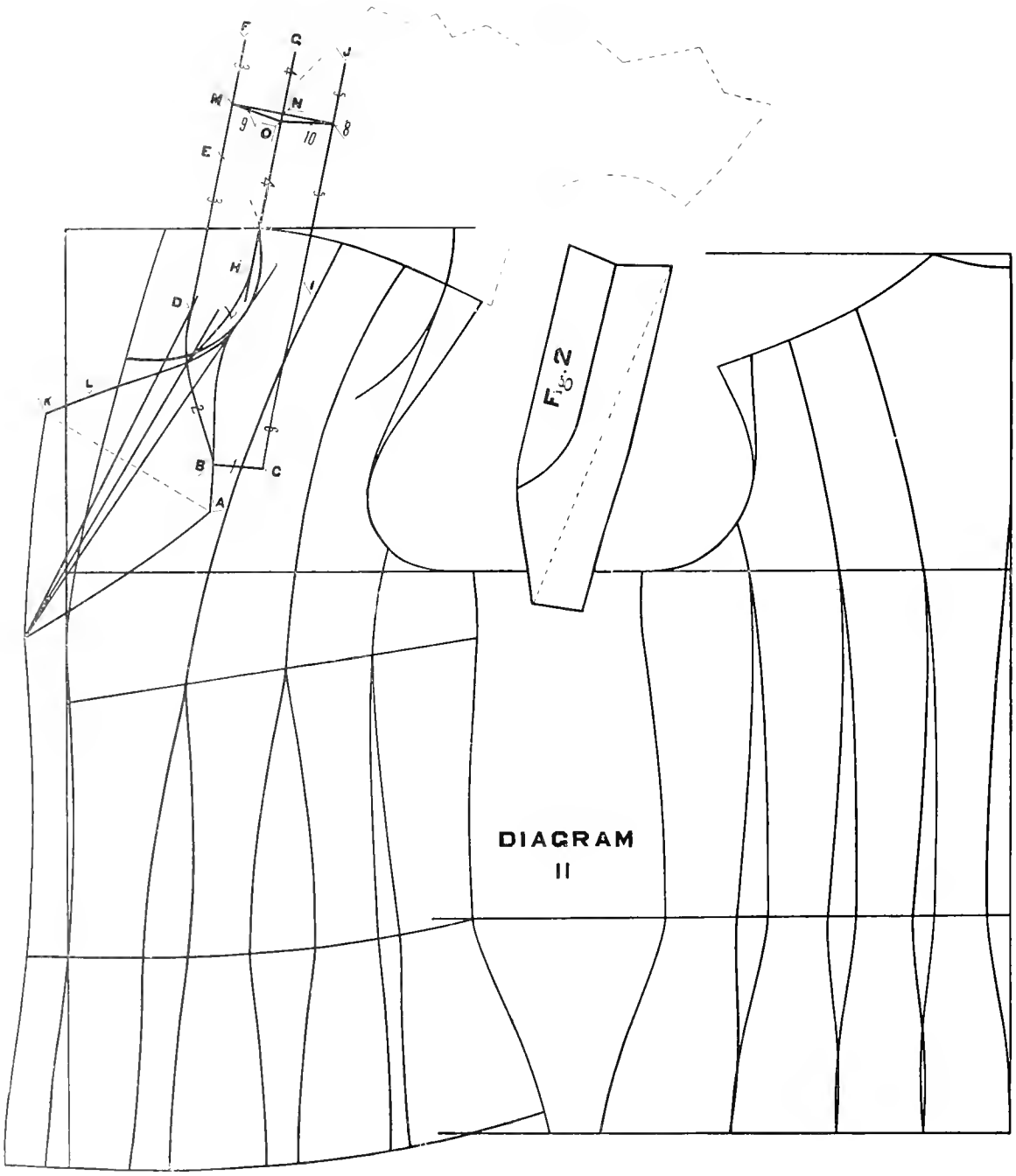
F
G
J
M
M
9
O
10
8
E
H
D
K
L
B
C
A
Fig. 2
DIAGRAM
II

This completes the collar, the two halves sewing together on lines 9 and 10 for canvas and under collar, and line 8 should be placed on a lengthwise fold of the goods for outside or top collar.

Place a piece of paper under the diagram and trace the collar as follows: Beginning at C, trace lines 1, 2, 3, 9, 10, 5, 6; trace the break-line on lines 4 and 7, as shown in Fig. 2.

The dotted lines on Fig. 2 indicate the straight of goods for under collar and canvas.

The $\frac{1}{4}$ inch fulness allowed on collar should be eased in for about 2 inches in front of shoulder seam.

This diagram of a coat shows the front and back having four pieces each, and at the present time is called a Corset Coat, further illustrating the variations that may be made in designing, the same principles being used in this as in all previous diagrams shown in this work.

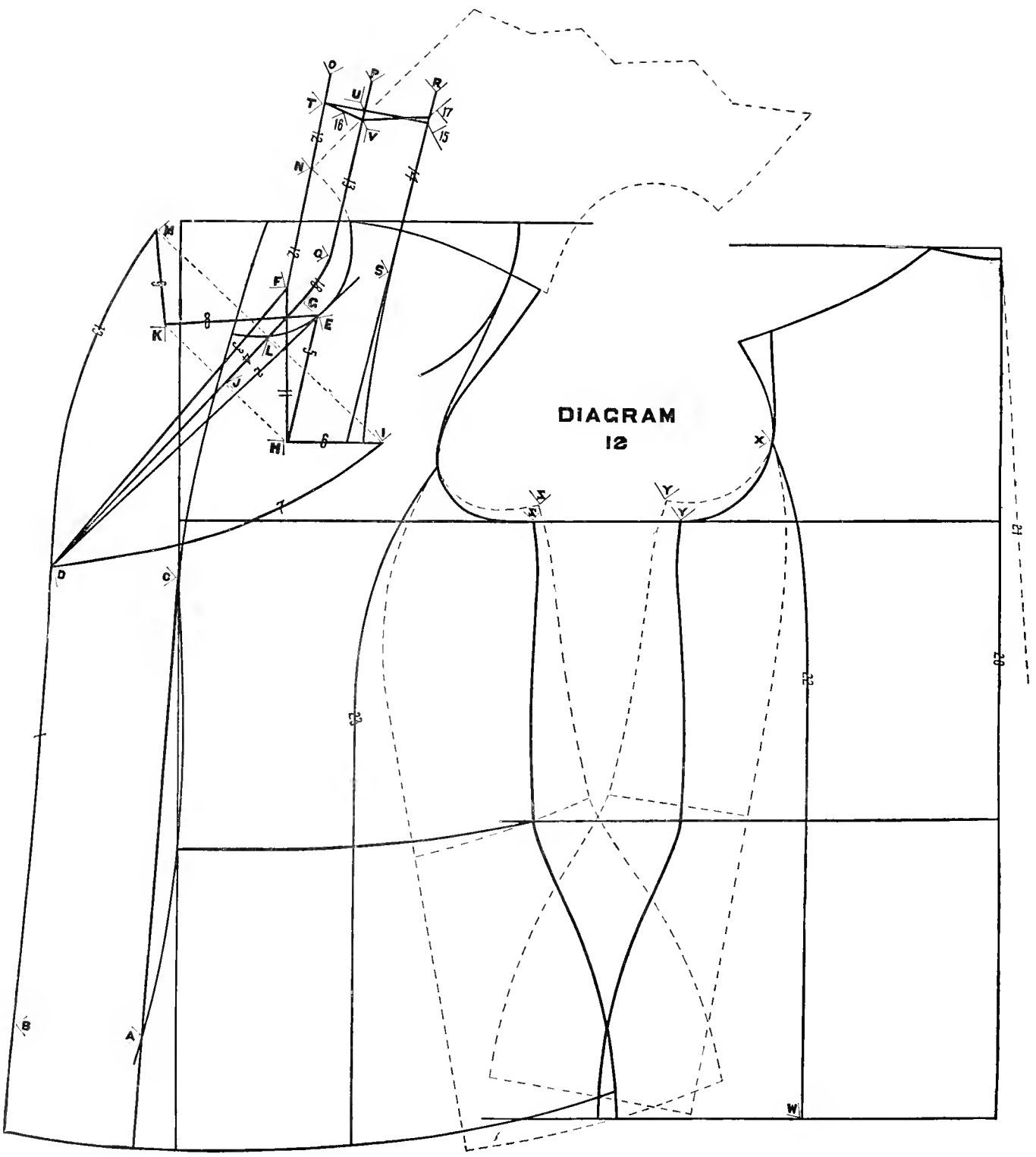
DIAGRAM
12

DIAGRAM 12.

DOUBLE-BREASTED COAT WITH PEAK LAPELS.

A to B is 3 ½ inches (more or less according to size of person).

C to D is 3 ½ inches (or the same as A to B).

Draw line 1 straight.

Then locate the end of the lapel—in this diagram it is located at D, but may be higher or lower.

Draw line 2 from D to where it blends into the neck-curve, establishing E.

E to F is 1 ⅛ inches, or the height of the collar-stand.

Draw line 3 straight from D to F.

G is the centre between E and F.

Draw line 4 straight from D to G.

Draw line 5 from E straight, locating H as desired. E to H is 3 ½ inches in this diagram, but may be more or less.

Draw line 6 straight from H 2 ½ inches (more or less), locating I.

Draw line 7 with point T of the curve-rule at I.

Having designed the lapel as you wish, proceed to transpose it so that when cut it will fold to where designed to finish.

Place the long arm of the square on line 4, letting the short arm touch at H, and locate J as per dotted line.

Place the corner of the square at J with the long arm on line 4, and locate K at right angles to line 4, with the distance from J to K the same as that from J to H.

Draw line 8 from E to K straight.

Place the long arm of the square on line 4, letting the short arm touch at I, and locate L as per dotted line.

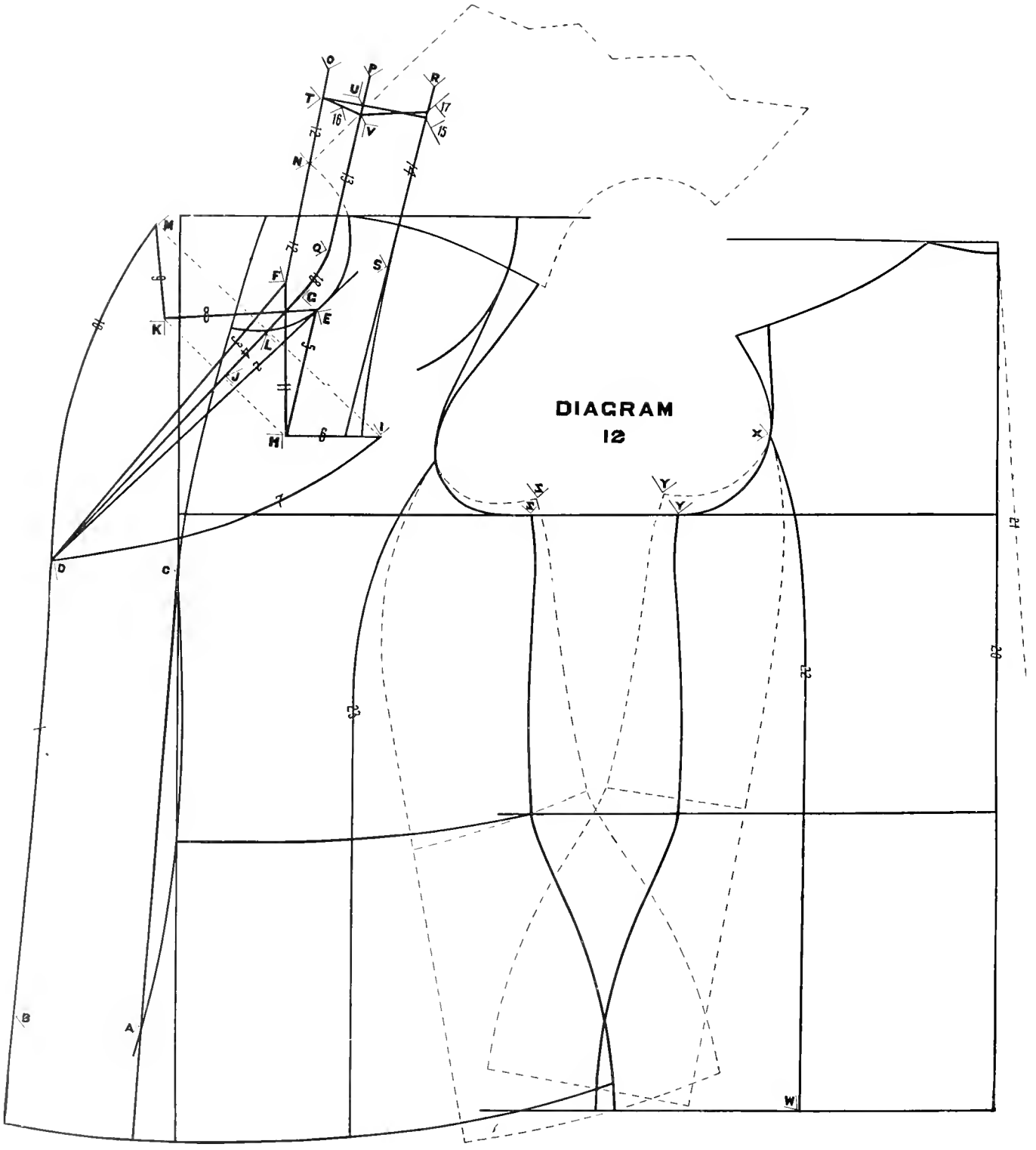
DIAGRAM
12

Place the corner of the square at L, letting the long arm rest on line 4, and locate M at right angles to line 4, with the distance from L to M the same as that from L to I.

Draw line 9 from K to M straight.

Draw line 10 with point 5 of the curve-rule at M.

TO DRAFT THE COLLAR.

Place the edge of the rule at H, letting it touch the point where line 8 crosses line 4, and draw line 11, locating F, and making the distance from H to F the same as E to K.

Cut out the back and place the shoulder lines together, as shown by dotted lines in diagram, locating N.

Draw line 12 straight from F through N.

O to P is the height of collar stand, 1 1/8 inches.

Q is the same distance from line 12 as P is from O, 1 1/8 inches.

Draw line 13 straight from Q to P

P to R is the width of collar (1 1/2 inches in this diagram).

Q to S is the same as P to R.

Draw line 14 straight from R through S.

The collar may be curved from S to line 6, as shown, if desired.

Measuring the neck-gorge from E to N, it is found to be 4 3/4 inches, and as the collar must be fulled in 1/4 inch, it must be 5 inches long.

F to T is therefore 5 inches.

Draw line 15 at right angles to line 12.

U to V is 1/4 inch.

Draw line 16 from T to V straight.

Draw line 17 straight from V, crossing line 15, 1 1/8 inches from U.

Draw line 18 with point O of the curve-rule at Q.

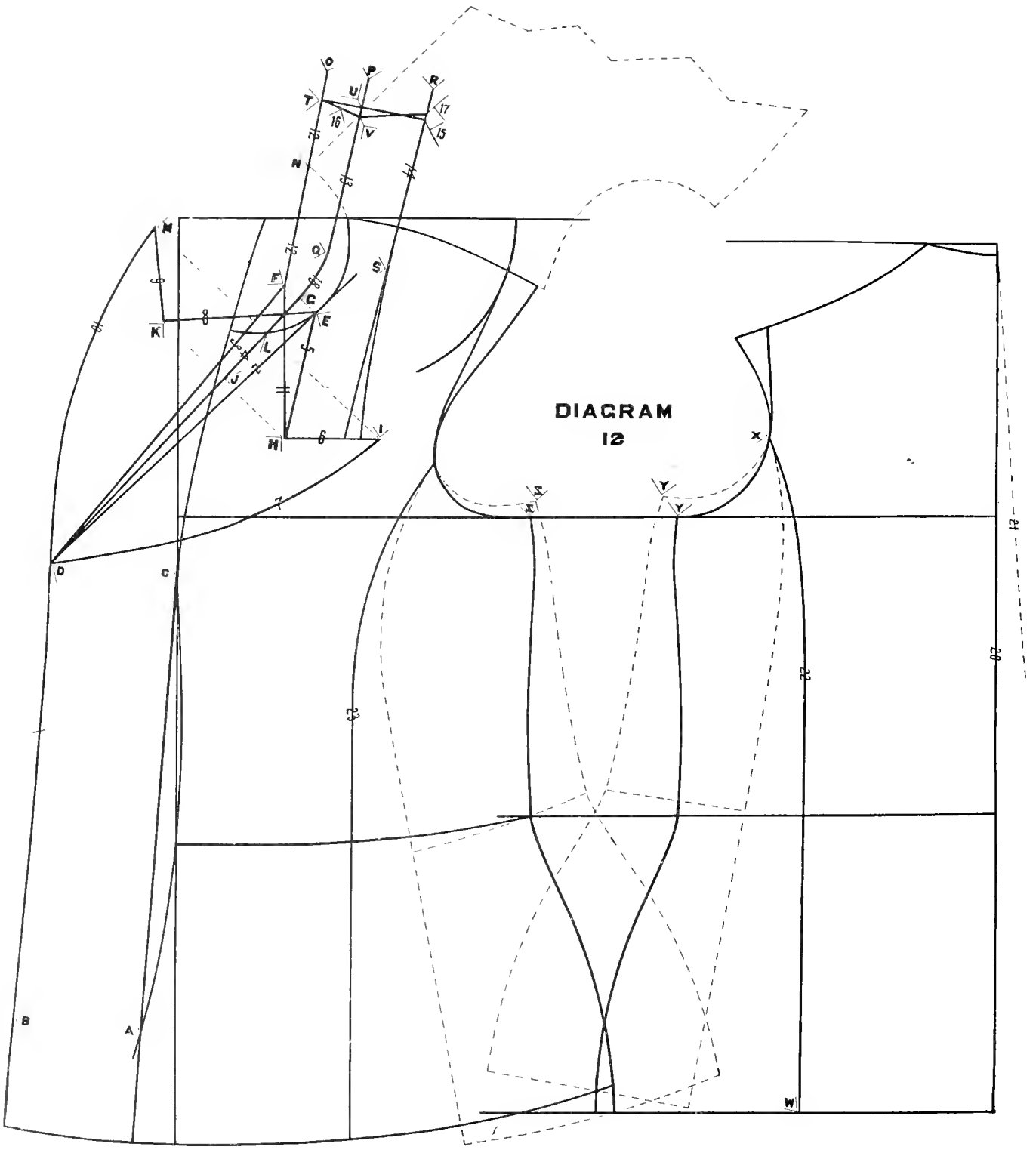
DIAGRAM
12
O
P
R
T
U
17
16
15
V
N
M
Q
S
F
G
E
K
L
J
H
I
X
Y
D
C
B
A
W
23
22
20
21

Trace out the collar on lines 11, 12, 16, 17, 14, 6.

Trace the break-line on lines 18 and 13.

By laying line 20 on the fold of the goods a regular box coat will be produced, but a fitted back may be made for this front by taking out in the back, at the waist line, the difference between the first and the second balance measures, while a half-fitted back is produced by taking out one-half of that amount.

Tight-fitting fronts are also made with this style of collar and lapel, and in such cases the button-stand, or lap, should be about twice as wide at the bust as it is at the waist line; the dart should slope so as to run parallel to the edge of the coat when buttoned.

Extra fulness at the bottom of a coat may be produced as follows:

Place line 20 on the fold of the goods at the neck, and 1½ inches from the fold of the goods at the bottom (dotted line 21 showing the fold of goods). This gives 3 inches of fulness in the centre back at the bottom of the coat.

Cut the pattern on line 22, separating it at W 3 inches, keeping the pattern together at X, as shown on diagram by dotted lines.

Proceed in like manner with the front, cutting through on line 23, separating at the bottom until the desired fulness is produced.

The first impression might be that by cutting on line 22 and spreading the pattern at the bottom, that the same result would be produced as by adding a like amount under the arm; but by observing the dotted lines it will be seen that the arm-hole has been changed in shape, and that at Y it has raised, but when the garment is sewn together this will resume its former position, thereby forcing the goods back to where the slash was made at line 22.

The front has also raised at Z, but will drop to its former position when the garment is on the person, throwing the fulness to where the slash was made at line 23.

This rule applies to all garments where fulness is wanted at a given point. Put the fulness where you wish it by cutting and spreading the pattern at that point, but never put fulness where it is not wanted with the expectation that it will be drawn to the point where it is wanted; if you do, the result will be a disappointment.

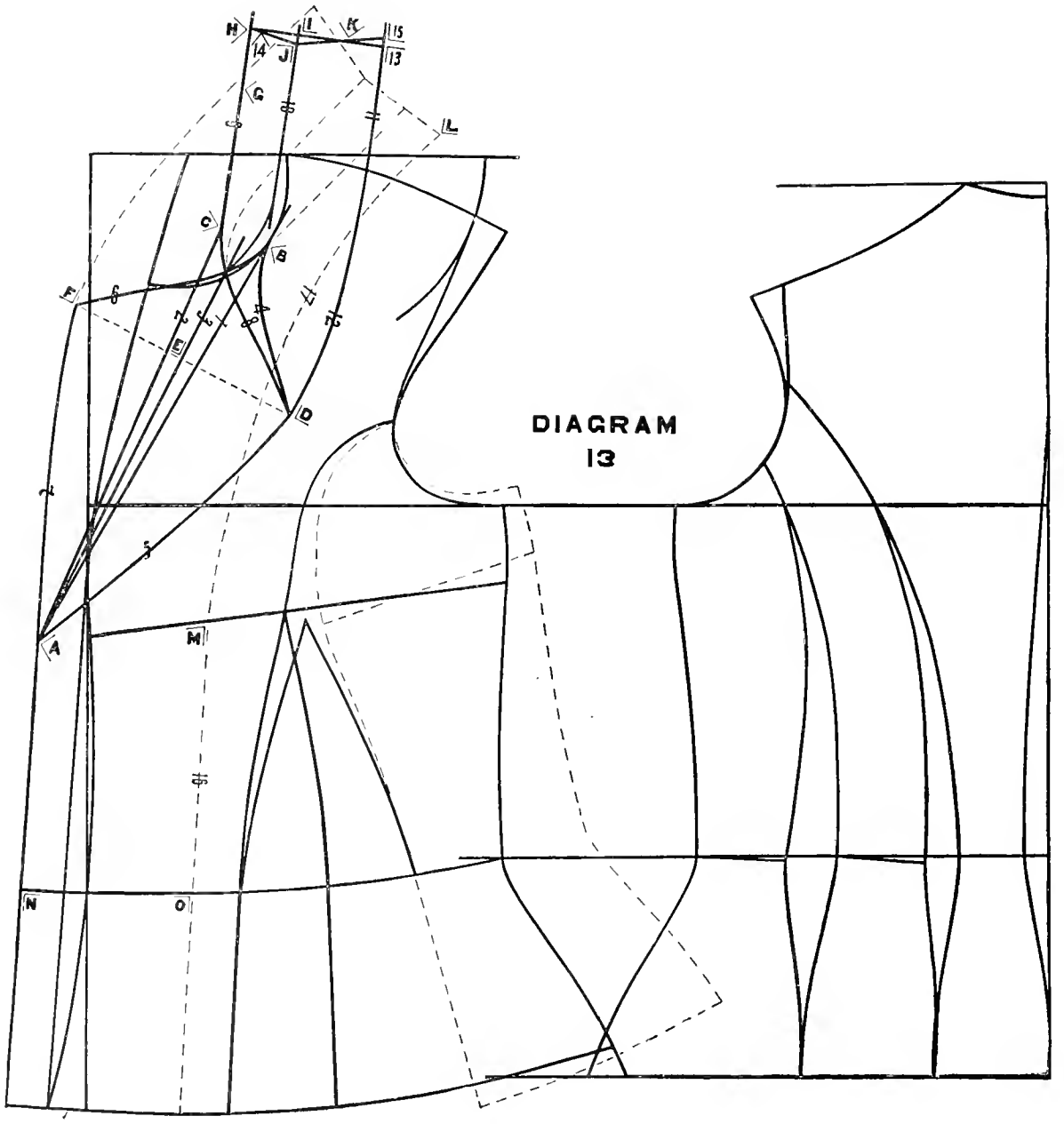

DIAGRAM
13

DIAGRAM 13.

COAT WITH SHAWL COLLAR.

Establish point A wherever you wish the lapel to end.

Draw line 1 from A to where it will blend into the neck-curve, establishing point B.

B to C is the height of collar-stand, 1 1/8 inches (more or less if desired).

Draw lines 2 and 3 straight.

Draw line 4 with point 12 of the curve-rule at B, establishing D.

Draw line 5 with point C of the curve-rule at D.

Place the long arm of the square on line 3, letting the short arm touch at D and establish E.

E to F is the same as D to E, and at right angles to line 3.

Draw line 6 with point M of the curve-rule at B.

Draw line 7 with point 22 of the curve-rule at F.

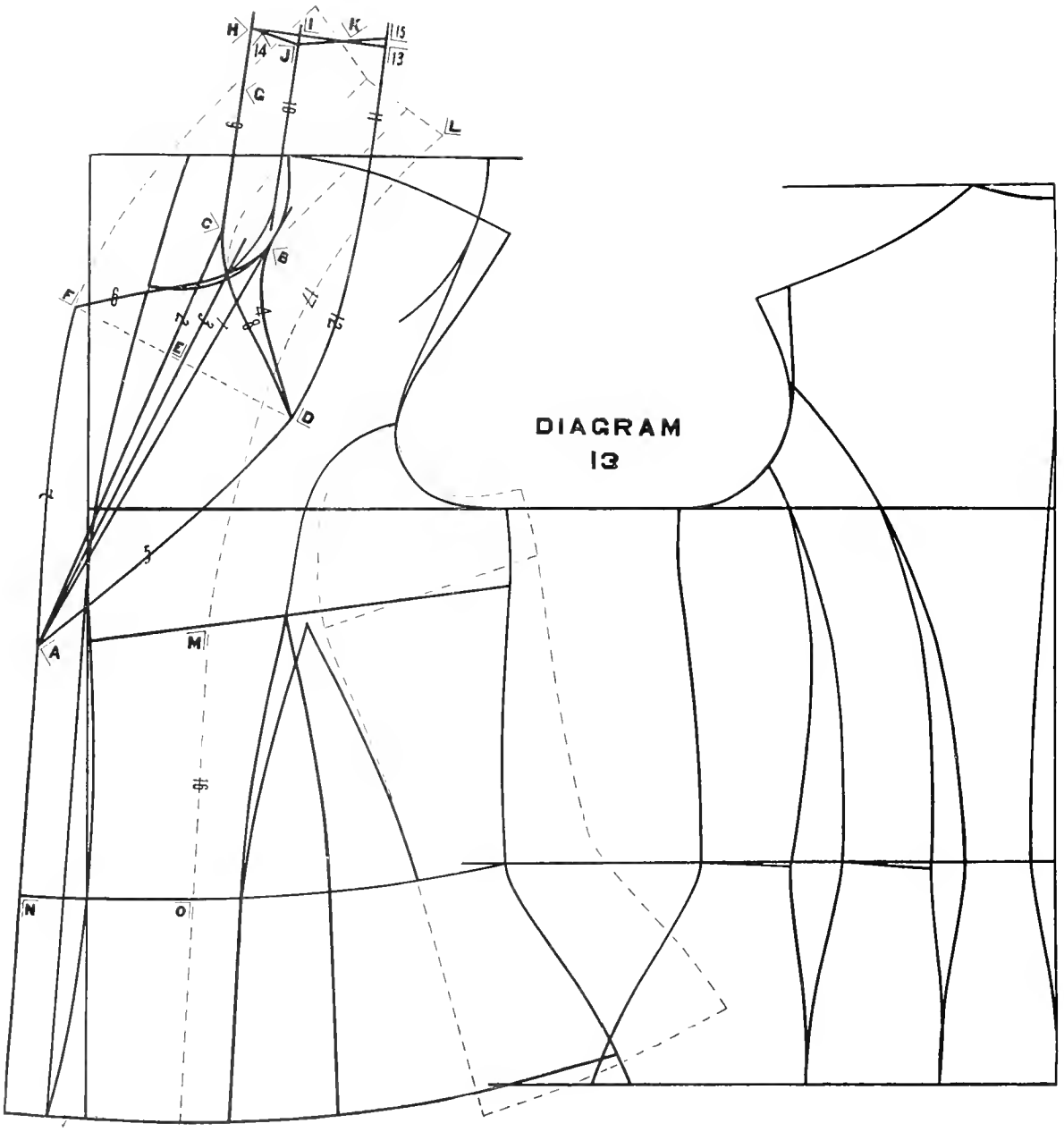
H
I
K
15
14
J
13
G
L
C
B
F
E
D
A
M
N
O
DIAGRAM
13

DIAGRAM 13.

THE COLLAR.

Draw line 8 from C to D with point 12 of the curve-rule at C.

Cut out the back, put the shoulder lines together and establish G.

Draw line 9 through G, blending into line 8.

Line 10 is 1⅛ inches from and parallel to line 9.

Line 11 is 2 inches from and parallel to line 10.

Draw line 12 with point 24 of the curve-rule at D, blending into line 11.

By measuring around the neck-gorge, from F to G, you find it to be 9 inches, and as the collar should be fulled on ¼ inch, it must be 9¼ inches long.

D to H is therefore 9¼ inches on lines 8 and 9.

Draw line 13 at right angles to line 9.

I to J is ¼ of an inch.

I to K is the same as I to H.

Draw line 14 from H to J straight.

Draw line 15 from J through K to line 11.

Trace out the collar on lines 8, 9, 14, 15, 11, 12.

The under-collar and canvas are cut out in the usual manner and sewed into the neck-gorge, while the top collar and facing are in one piece.

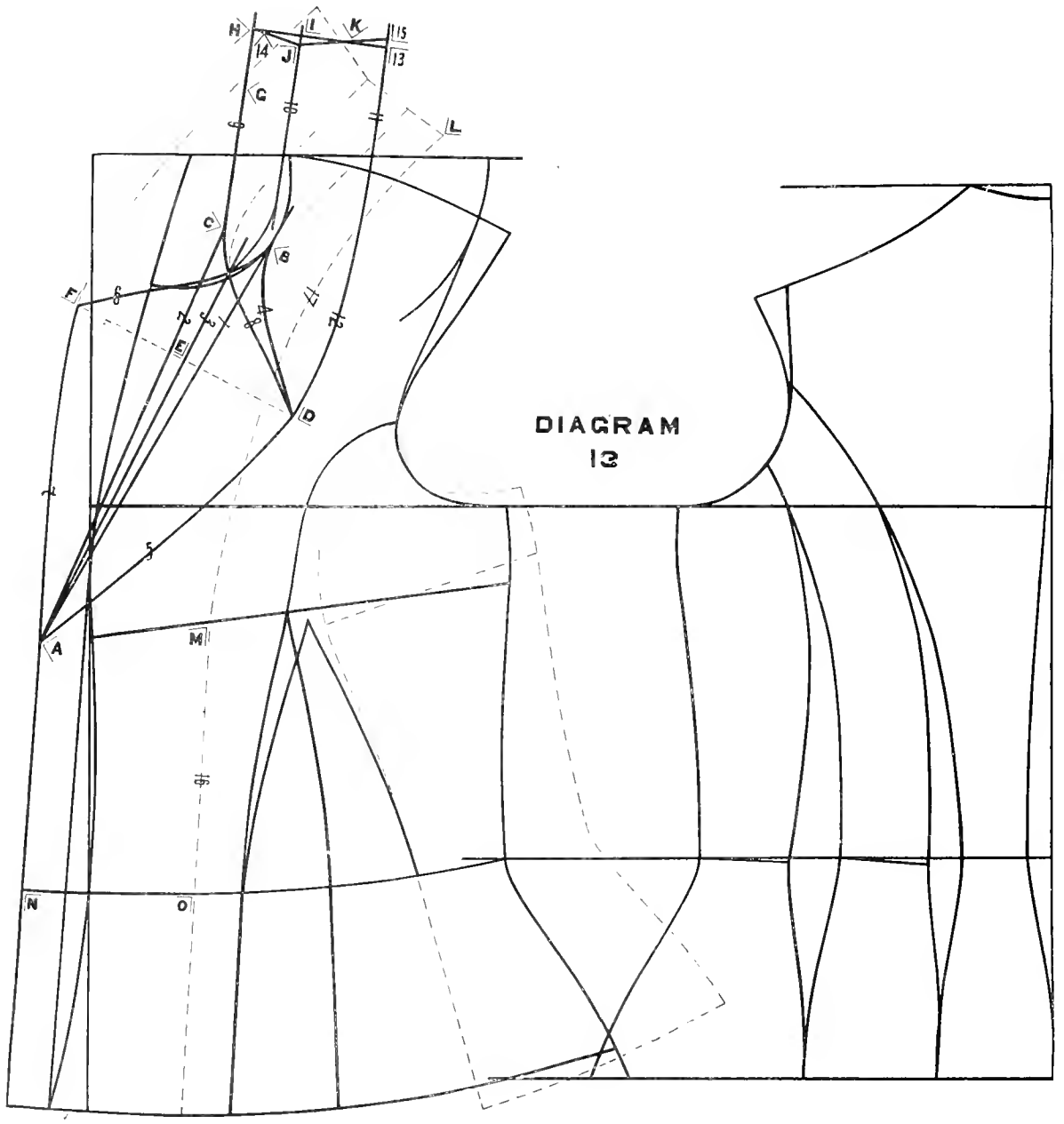

DIAGRAM
13

DIAGRAM 13.

TOP COLLAR AND FACING.

Take the collar which you have cut out, place the reverse side up, and put point D on the collar to point F on the coat, letting line 8 on the collar follow line 6 on the coat; this will bring C on the collar to B on the coat. Mark around the collar as per dotted lines extending the line in the back 1 inch beyond the collar to L.

A to M is 4 inches, and N to O is the same.

Draw line 16 from M through O, to the bottom of the diagram.

Draw line 17 with point 5 of the curve-rule at L.

Trace out the facing, beginning at the bottom, running up the front and through line 7, then on the outside dotted lines to L, then on lines 17 and 16 to the bottom.

Where the form is flat in front and you wish to give the coat a shapely appearance, after drafting the front, cut the pattern from the top of dart to the arm-hole, as shown on diagram, spread the pattern at the bottom, keeping it together at the arm-hole, as shown by the dotted lines.

This will make a larger dart at waist and hip, but it must not run higher than before, therefore locate the top of dart midway between the top of dart points on the two pieces that have been separated; these will be found by the ends of dart lines where cut apart.

Place points O and 10 of the curve-rule at this centre point, and draw the dart lines to the waist, as shown on the diagram.

By thus separating the pattern and widening the dart, you may have as full a bust as you wish without affecting the fit of the coat; the principle of which is given fully in diagram 12.

To add to the bust measure would increase the size of the garment, thereby destroying the fit, while to spring in more darts simply rounds out the front, leaving the coat the same size when on the person.

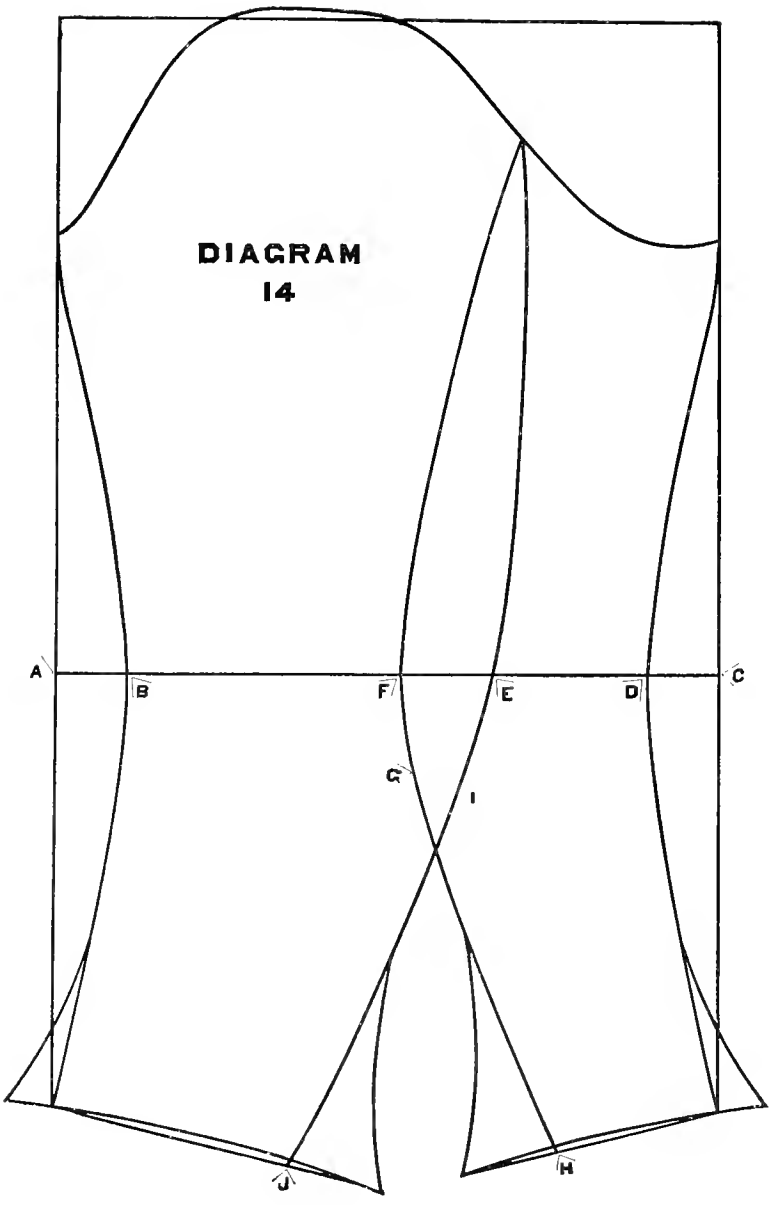
DIAGRAM
14
A
B
F
E
D
C
G
I
J
H

DIAGRAM 14.

COAT SLEEVE.

To draft a sleeve for an outside garment, measure the arm-hole in the pattern and add the desired fulness; this will give the arm-hole measure for the sleeve. As the elbow and cuff must be *larger* than for the garment worn under the same, add the necessary amount to the *elbow* and *hand* measures, and draft the sleeve as per diagram 4 with the following variations:

A to B is 1 ½ inches (more or less if desired).

C to D is the same as A to B.

B to E is one-half the elbow measure plus 1 ½ inches (or as desired).

D to F is the remainder of the elbow measure not used from B to E.

The divisional of the upper and under sleeve may be equal, making a half and half sleeve, or in any manner desired.

Put notches at B and D, also at E and F, keeping these notches together when joining the sleeve, thereby preventing a twist in the same.

In all sleeves where the upper is wider than the under, the upper sleeve will necessarily be longer than the under at the outside seam, and this fulness must be gathered into the under just below the elbow notch. To insure this being done correctly, proceed as follows:

F to G is 2 inches.

J to I is the same as G to H.

Put notches at G and I, and keep these notches together in joining the sleeve, thereby keeping the fulness between F and G.

This diagram shows a bell effect at the hand, there being twice the amount on the back of the sleeve as upon the front.

In drafting the sleeve, as well as all other patterns, the best results are obtained by using the same curve wherever two lines sew together.

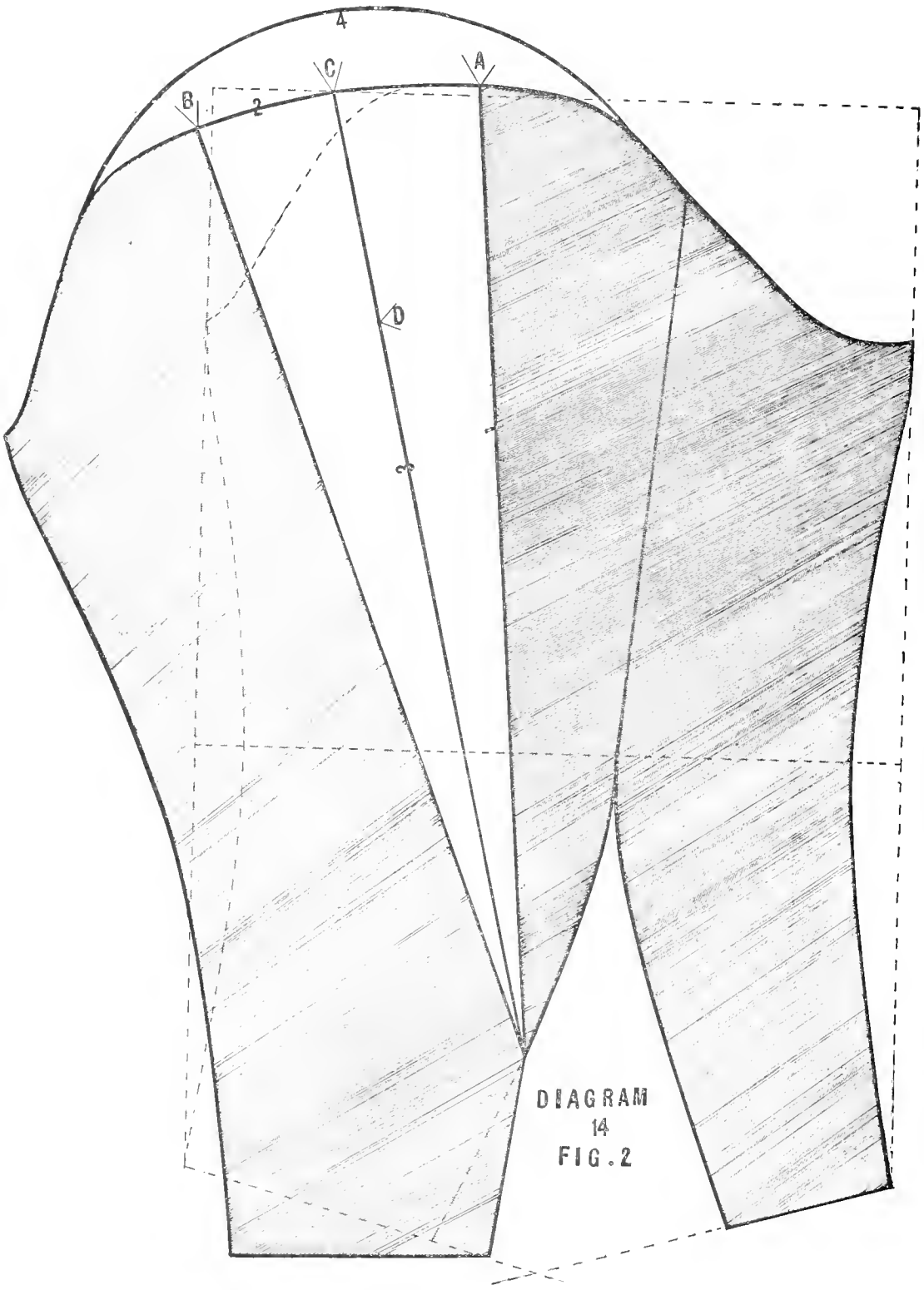

DIAGRAM
14
FIG. 2

DIAGRAM 14. FIGURE 2.

This diagram is intended to further illustrate the variations that may be made in drafting, in order to conform to the changes in styles.

Draft the sleeve as in Diagram 14, then proceed as follows:

A is the top of the sleeve, which is centre between E and F in Diagram 4.

Draw line 1 straight from A to the centre of the diagram at the hand.

Cut out the sleeve, and cut through the upper from A on line 1.

Lay the two pieces of the upper on a piece of paper, keeping them together at the bottom, but separating them at the top, making the distance from A to B 6 inches (more or less if desired).

Draw line 2 joining the tops of the two pieces with point R of the curve rule in the centre.

C is centre between A and B.

Draw line 3 from C straight through the centre of the opening.

C to D is 5 inches.

Sweep line 4, pivoting at D.

This gives a sleeve with 6 inches of extra fulness at the top, which may be plaited, gathered, or small darts may be run from line 4 to line 2, depending on the style of sleeve wanted.

Should more height be wanted at the top of the sleeve, make the distance from C to D less than 5 inches.

D may be placed at any point desired, and line 4 may be carried farther down in the arm-hole, thereby making the sleeve wider at the top.

Line 1 may be drawn to the elbow point, starting the fulness at the elbow, or it may be drawn to the bottom of the sleeve, starting the fulness at the hand.

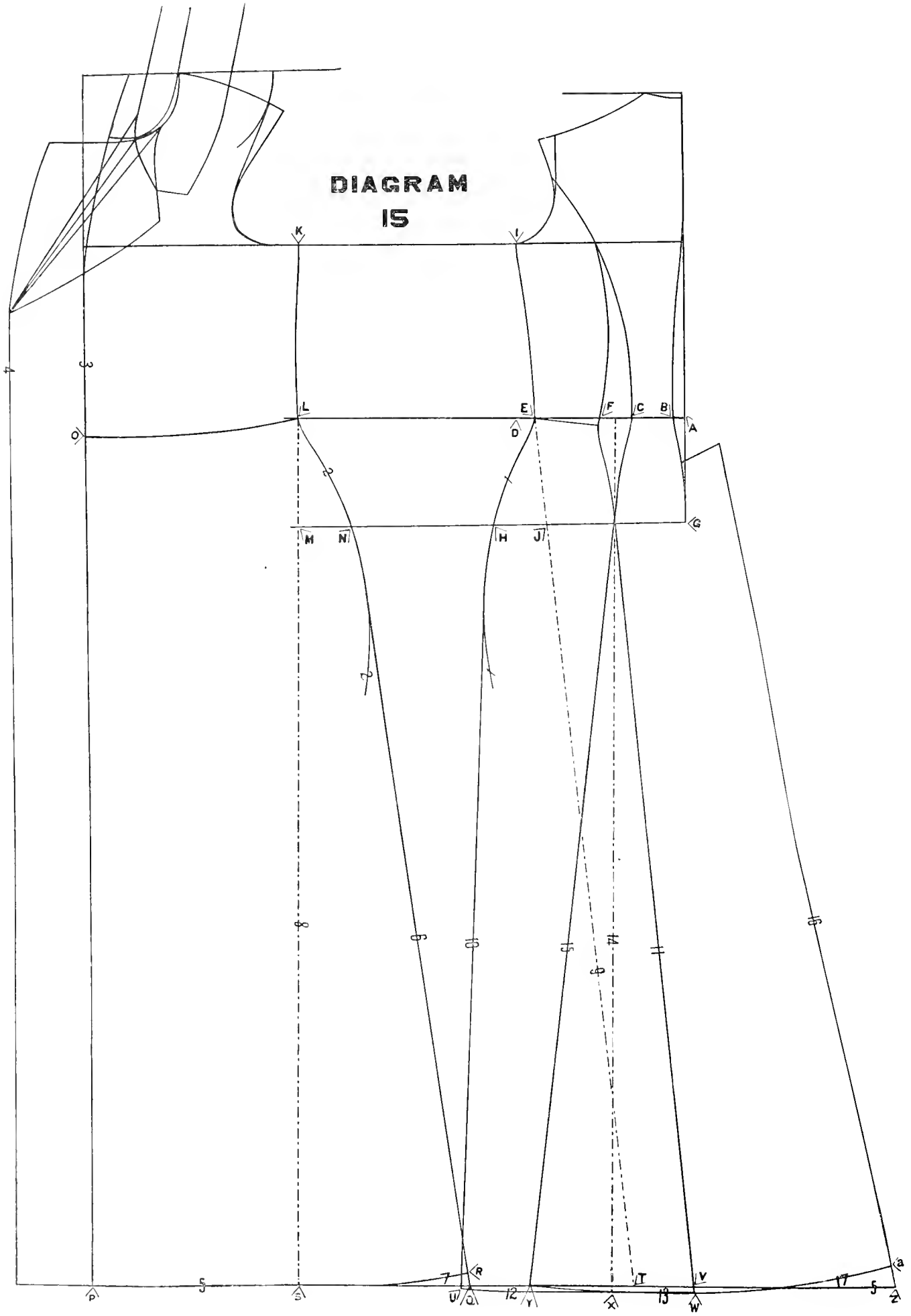
DIAGRAM
15
K
I
L
E
F
C
B
A
D
O
G
M
N
H
J
P
S
R
U
Q
Y
X
T
V
W
Z
a

DIAGRAM 15.

STORM COAT OR NEWMARKET.

When the back is divided into two pieces, the balance line should be placed well to the back of the arm-hole, making the balance measures short, as in this diagram. The first balance measure is 8 inches; the second balance measure is 5 inches, and the third balance measure is 9 ½ inches.

For long coats and wrappers, take the skirt lengths from the waist line to the carpet, in front, on the side, and down the centre back; then subtract an equal amount from each length, thereby making the garment an equal distance from the carpet at all points.

A to B is ½ inch.

B to C is 2 inches (more or less according to measures).

A to D is the first balance measure.

D to E is ¾ of an inch.

E to F is the remainder of second balance (3 inches in this case).

G to H is the third balance (9 ½ inches for these measures).

Draw line 1 with point 2 of the curve-rule at E, extending through H, as shown on the diagram.

Place the edge of the square on I and E, establishing J as per dotted line.

Place the edge of the square on K and L, establishing M as per dotted line.

M to N is the same as J to H

Draw line 2 with point W of the curve-rule at L, extending through N, as shown on the diagram.

Draw line 3 straight down from O the desired length of skirt in front, establishing P.

Line 4 is parallel to and 3 ½ inches from line 3.

Draw line 5 at right angle to line 3.

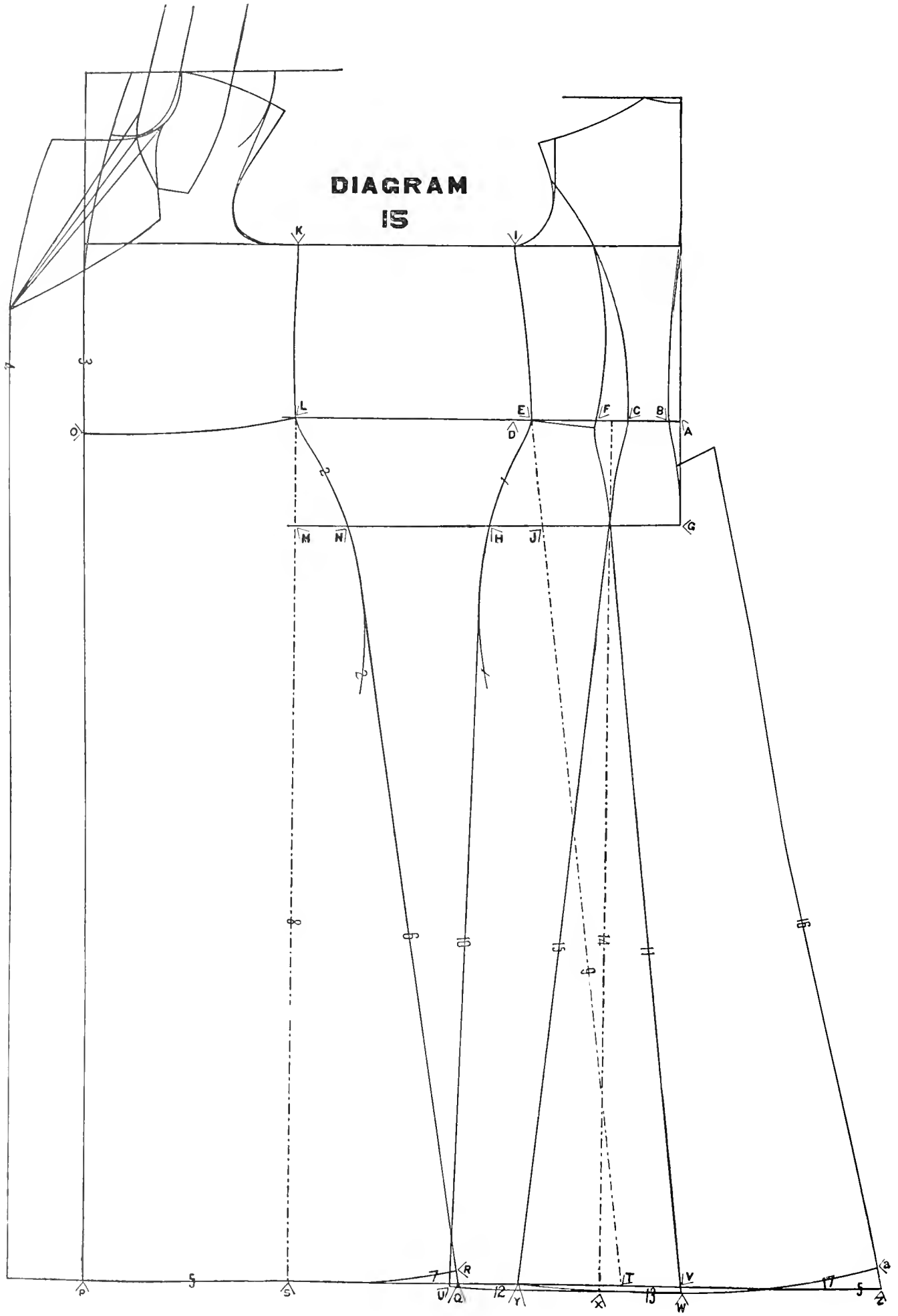
DIAGRAM
15
K
I
L
E
F
C
B
A
D
O
G
M
N
H
J
P
S
R
U
Q
Y
X
T
V
W
Z

P to Q is 18 inches for a medium size (more if desired).

Draw line 6 from Q to where it will blend into line 2 as shown on the diagram.

Measure down from L on lines 2 and 6 the length of skirt on the side, establishing R.

Pivot at L and sweep line 7 from R, blending into line 5.

Place the edge of the rule on K, L and M, and draw dotted line 8, establishing S.

Place the edge of rule on I, E and J, and draw dotted line 9, establishing T.

Lines 8 and 9 are equivalents, and by measuring from S to Q, we find there are 8 inches of increase on the back side of the front, and there must be the same amount of increase on the front side of the under arm-piece.

T to U is therefore 8 inches.

Draw line 10 straight from U to where it will blend into line 1, as shown on the diagram.

E to U is the same as L to R.

U to V is 11 inches for a medium size.

Draw line 11 from V to where it will blend into the hip curve on the back side of the under arm piece.

Measure down from F on line 11 the desired length of back, establishing W.

Sweep line 12, pivoting at E.

Draw line 13 from W, blending into line 12.

Find the centre between F and C, and from this point draw dotted line 14, establishing X, as shown on the diagram.

X to Y is the same as X to W.

Draw line 15 from Y to where it will blend into the hip line on the front side of the centre back piece.

Y to Z is 17 inches (more or less as desired).

If an open or vented back is wanted, measure down from B in the centre back 2 inches, and square back from this point $1\frac{3}{4}$ inches; draw line 16 straight from this point to Z, as shown in diagram.

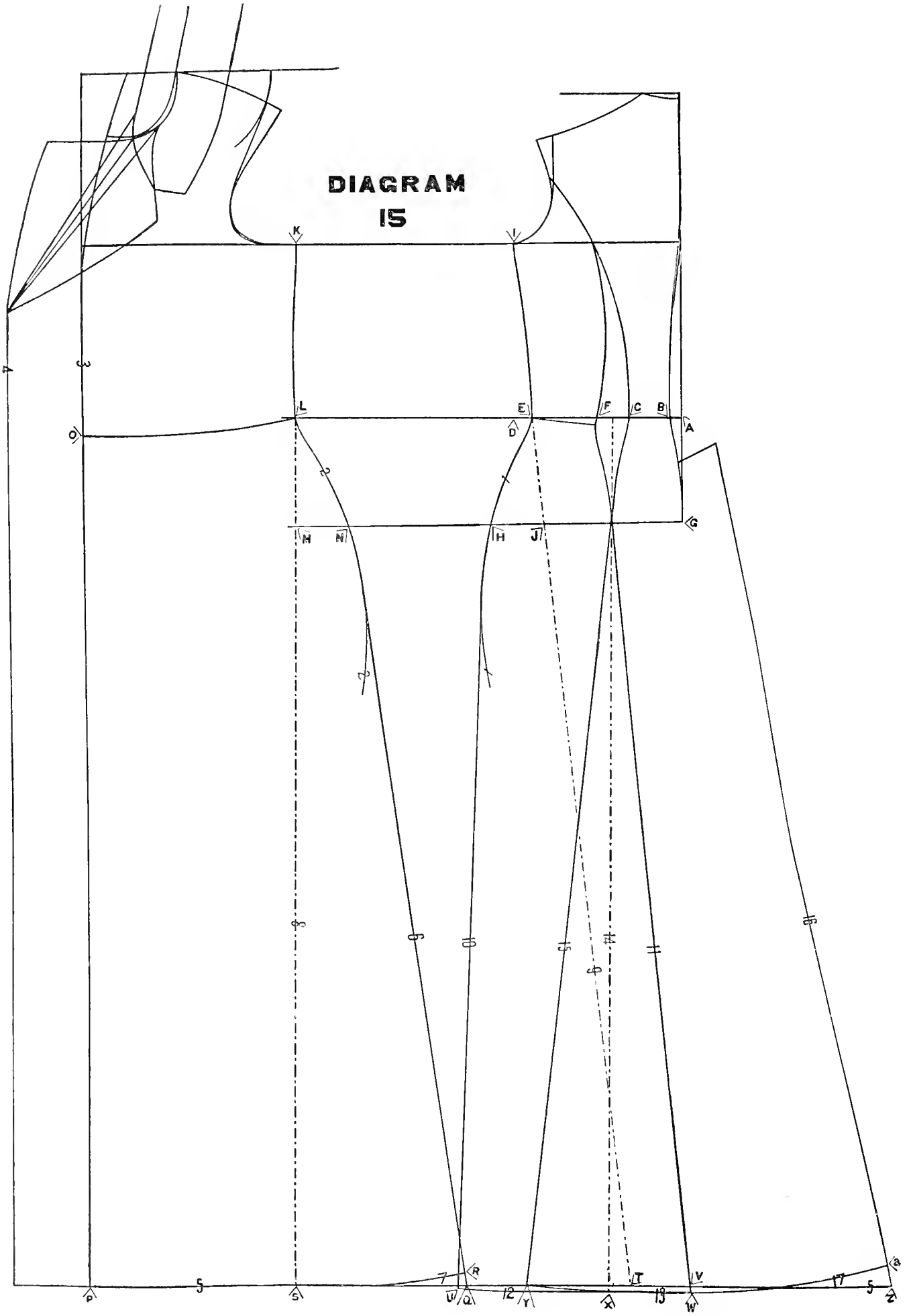
DIAGRAM
15
K
I
L
E
F
C
B
A
O
D
G
M
N
H
J
P
S
U
Q
R
Y
X
T
V
W
Z
a

For a closed back, draw line 16 from Z to where it will blend into the hip line at or near G.

Measure down from B the length of skirt in the back, establishing (a).

Draw line 17 from Y to (a).

The back may be made half-fitting by taking out at the waist line one-half of the difference between the first and the second balance measures.

This diagram is also used for a wrapper, by leaving off the lapel, and drawing line 4 up level with the neck, and squaring back into the neck-gorge. This will give a fulness at the neck, which is gathered into the neck band. The bottom should be made wider, and especially in the centre back, where the fulness may be plaited about 2 inches below the waist line, or it may be carried up to the back of the neck and plaited or gathered into the neck band at that point.

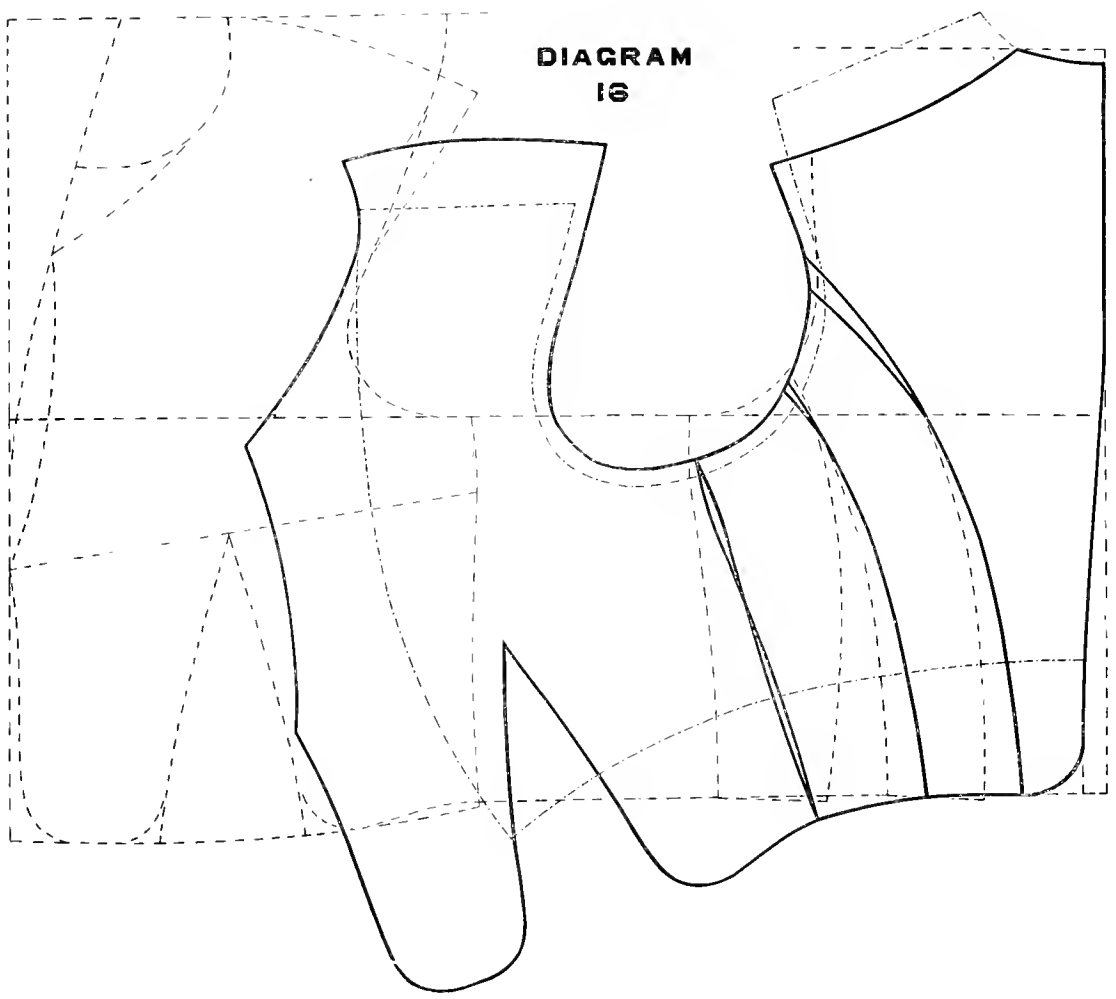
DIAGRAM
16

DIAGRAM 16.

EATON AND BOLERO JACKETS.

The Eaton Jacket is drafted like the coat, with the regular number of pieces, as shown by dotted lines.

By placing the pieces together at the waist line you form a garment with no seams excepting the shoulder seams.

The centre back must be laid on a lengthwise fold of the goods, touching the fold at neck and waist line.

This garment may be produced with a seam under the arm, or with an under-arm piece if so desired.

By cutting the pattern from top of dart to the arm-hole, you may bring the usual dart lines together at the waist line, and have a dart from arm-hole to bust instead. This is simply another way of producing novelties without injuring the fit of the garment.

We have also shown on this diagram, by the dotted lines, a Bolero Jacket with shoulder seam on top of shoulder, this being done by cutting a piece from the front and adding the same to the back. Cut out ½ inch or more all around the arm-hole, as shown on the diagram.

DIAGRAM 17.

YOKE FOR THE TOP OF SKIRTS, ETC.

Waist measure, 24 inches. Hip measure, 40 inches, which is taken 5 inches below where the waist measure is taken.

One-half the hip measure, 20 inches, minus one-half the waist measure, 12 inches, equals 8 inches of swell.

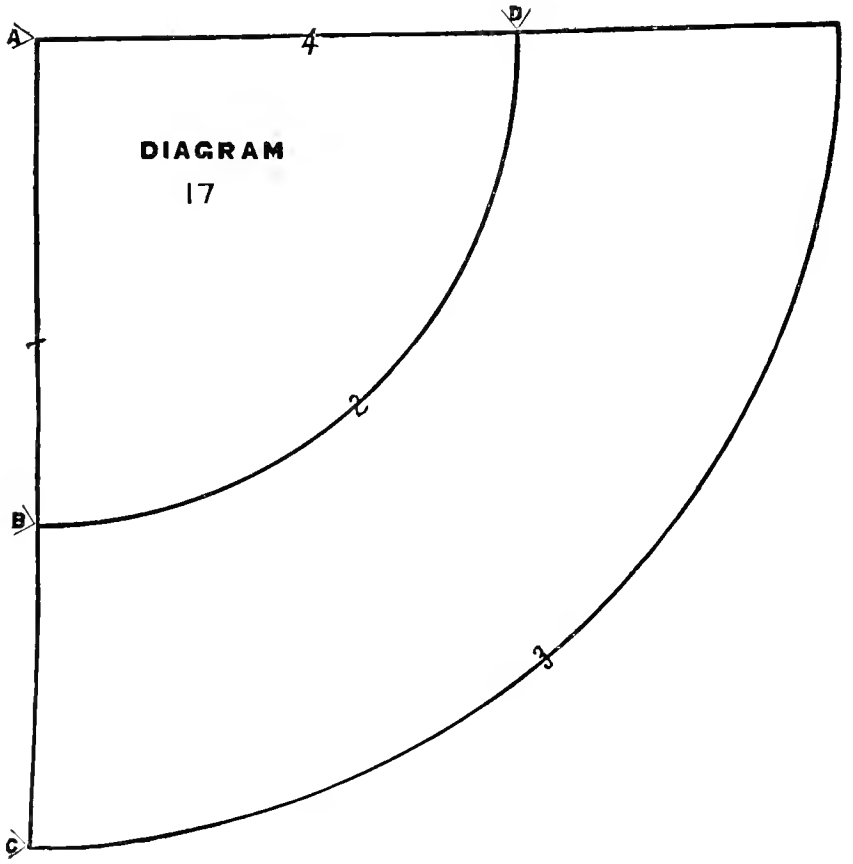

This diagram is a simple problem of geometry, the following being the solution:

Circles are to each other as their radii or diameters are to each other; and the difference of the arcs of two concentric circles is to the arc of the smaller circle as the difference of their radii is to the radius of that circle.

The arcs of the circles being 20 and 12 inches, their difference is 8 inches, and as the hip measure is taken 5 inches below where the waist measure is taken, the difference of their radii must be 5 inches, hence the following:

The difference between the waist and hip, 8 inches, is to the waist, 12 inches, as the difference of their radii, 5 inches, is to the radius of the waist, or 8 : 12 :: 5 : (?)

Multiplying the means together the product is 60, which divided by the one extreme (8) the quotient is 7 ½, which is the radius of the waist circle. From this proposition is deduced the following rule:

Multiply one-half the waist measure by 5, and divide the product by the swell (which is the difference between one-half the waist and one-half the hip), the quotient will be the radius of the waist circle, or distance from which to pivot.

EXAMPLE.

One-half the waist measure, 12 inches, multiplied by 5 equals 60; 60 divided by 8 (the swell) equals 7 ½ inches, which is the radius of the waist circle, or distance from which to pivot.

DRAFT THE YOKE AS FOLLOWS:

Draw line 1 straight.

A to B is the radius of the waist, 7 ½ inches.

B to C is 5 inches, always.

Sweep line 2 from B, pivoting at A.

Sweep line 3 from C, pivoting at A.

Measure around on line 2 from B, one-half the waist measure, 12 inches, and locate D.

Draw line 4 from A through D to line 3

This diagram is used for drafting yokes for the tops of skirts and underwear, and also for the skirt to a coat, where the skirt sews on, at the waist line.

The principles used in this diagram are also used to draft a flounce for the bottom of a skirt, the diagram for the same being shown elsewhere.

SKIRT FOR COAT.

Draft the coat to the style desired, down to the waist line; then draft a yoke to the hip and waist measures, extending lines 1 and 4 down from B and D, the distance necessary to give desired length of skirt, and from this point sweep a line for bottom of skirt, pivoting at A. This will give a closed front with equal length all around, which may be shaped to a cut-a-way, or any style of skirt desired.

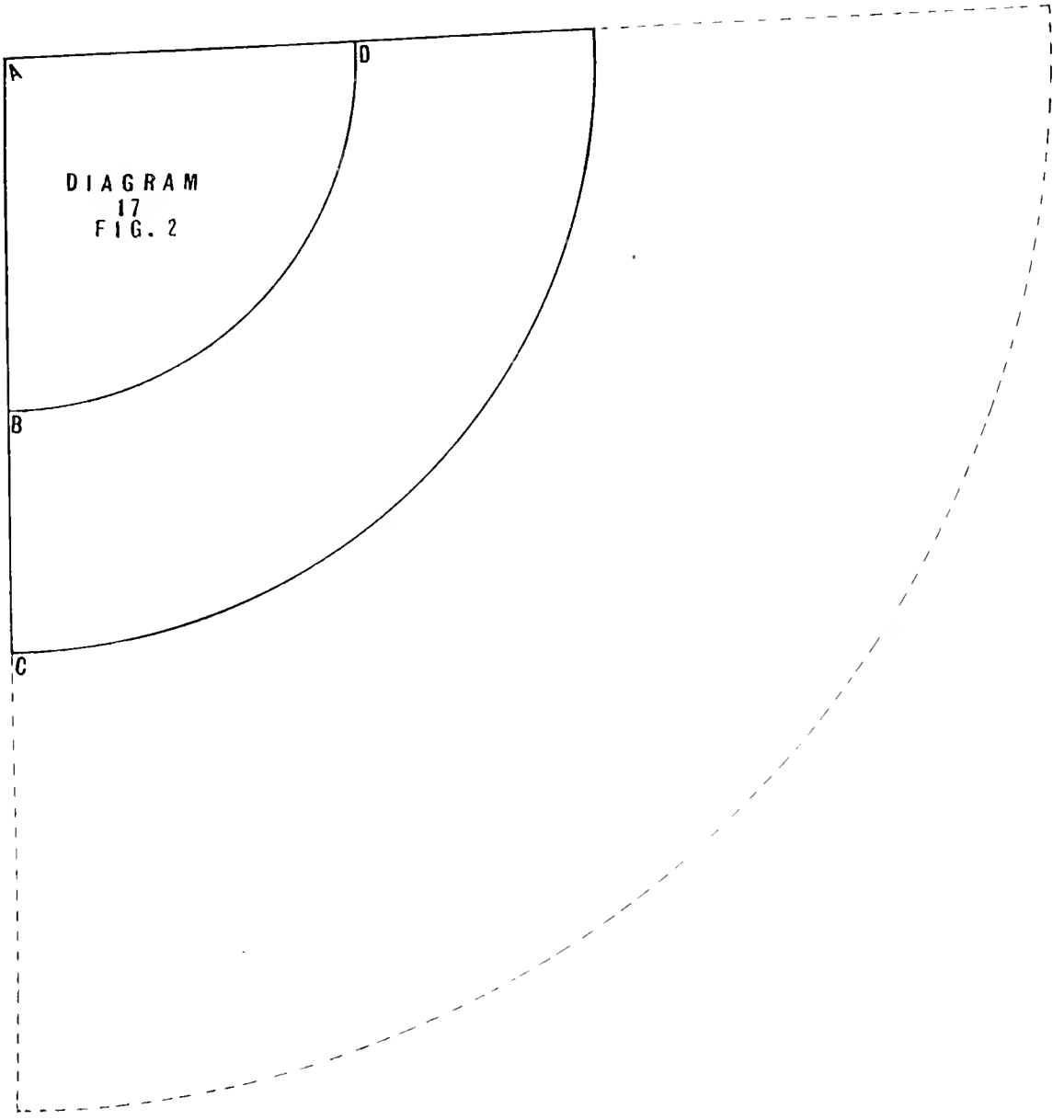

This skirt will fit smoothly at the waist and hips, but will have more or less fulness at the bottom, depending on the relative size of waist and hips; less fulness may be produced at the bottom by adding one inch or more to the waist measure, and fulling this into the coat at the waist line.

EXAMPLE.

Waist 12 inches, plus 1 inch, equals 13 inches.

Hip 20, minus 13, equals 7 inches of swell.

Waist 13, multiplied by 5 equals 65.

65 divided by 7 equals 9 2-7, as distance to pivot from A to B.

This will give 1 inch to full in at the waist, as the coat is 12 inches, while the top of the skirt is 13 inches.

As the waist has been increased without changing the size of the hip, the skirt must be smaller at the bottom.

SKIRT DRAFTING.

The advantage of a method whereby a skirt may be drafted for any individual form, producing a perfect fit at the waist and hip, giving the exact lengths and the proper shape at the bottom for finishing, and at the same time controlling the hang of the skirt so as to conform to the prevailing style, is too well understood to necessitate any comment; the only question which may arise in the mind of the reader being, can it be done? We answer, yes, it can and is being done every day by those who have mastered this work; and the only dissenters are those who will not take the time, and apply their minds in the proper manner to thoroughly master the problems herein contained and their underlying principles.

These diagrams, and the demonstrated principles connected with the same, are all based on geometry, and the solution of the problems is as positive as Euclid's elements, and if thoroughly understood, any skirt that is or will be worn can be easily drafted.

Do not begin at the diagram which describes the skirt you may wish to use first, but begin at the beginning, and fully master each succeeding diagram until the whole is understood, then draft your first skirt.

As all skirts are drafted to measures, the first important item is to take these measures correctly, for if the measures are not correct the skirt cannot fit, while accurate measurements will produce a perfect pattern, and are easily taken if the following instructions are followed:

THE WAIST MEASURE.

Take the waist measure tight around the smallest part of the waist.

THE HIP MEASURE.

Take the hip measure very loose around the hips, five inches below where the waist measure was taken.

THE SKIRT LENGTHS.

As the band of the skirt will adjust itself to the smallest part of the person, tie a cord around the waist, drawing it tight, so that it will seek the place where the waist band will come in wearing the skirt.

LENGTH IN FRONT.

Measure from the cord at the waist down the centre front to the carpet. While this measure is being taken, be sure that the person being measured stands erect, looking at an object on a level with the eyes, for should she look down, the measure will be too short.

LENGTHS ON THE SIDES.

Take a measure on each side, from the cord at the waist, over the fullest part of the hip, down to the carpet.

LENGTH IN THE BACK.

Measure down the centre, back from the cord at the waist, to the carpet.

From the above measures, taken to the carpet, make the following changes:

Subtract $\frac{1}{2}$ inch from the *length* in *front;* subtract $\frac{1}{4}$ inch from the *side lengths*, and draft a skirt to these corrected measures, and it will hang $\frac{1}{4}$ inch from the floor all around when walking.

EXAMPLE.

Length in front, to carpet, 40 ½ inches, less ½ equals 40, corrected length

Length on the side, to carpet, 40¾ inches, less ¼ equals 40 ½, corrected length.

Length in back, to carpet, 41 inches, equals 41, corrected length.

If a short skirt is wanted, subtract an equal amount from the corrected measures, in the front, on the sides, and in the back.

EXAMPLE.

Length in front, corrected, 40 inches, less 3 equals 37 inches, for short skirt.

Length on the side, corrected, 40 ½ inches, less 3 equals 37 ½ inches, for short skirt.

Length in back, corrected, 41 inches, less 3 equals 38 inches, for short skirt.

The following measures will be used for drafting skirts, unless otherwise stated.

Hip measure, 44 inches, and as a pattern is drafted for one-half of the skirt, we use one-half of this amount, 22 inches.

Waist measure 26 inches, one-half of which, to draft one-half the skirt, is 13 inches.

Subtracting the *waist measure*, 13 inches, from the *hip measure*, 22 inches, gives 9 inches as the increase from the waist to the hip, which is called the *swell*.

Complete measures from which to draft the skirt :

Waist measure,	13	inches.
Swell measure,	9	inches.
Front length,	40	inches.
Side length,	40 ½	inches.
Back length,	41	inches.

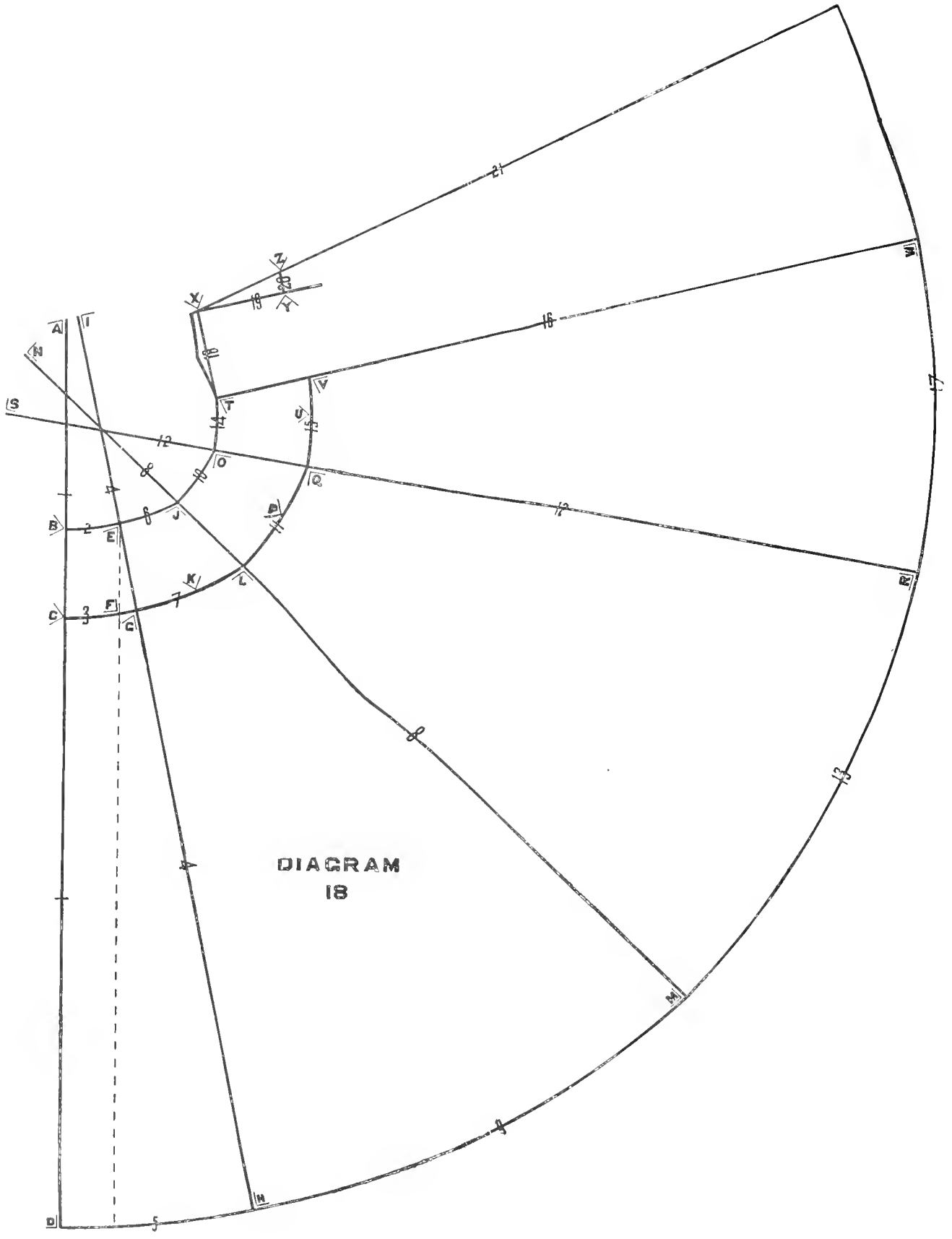
A
B
C
D
E
F
G
H
I
J
K
L
M
N
O
P
Q
R
S
T
U
V
W
X
Y
Z
DIAGRAM
18

DIAGRAM 18.

SKIRT.

Draw line 1 the *length* of *skirt* in *front* (40 inches) plus *one-half* the *waist measure* (13 inches), which equals 53 inches.

A to B is *one-half* the *waist measure* (13 inches).

B to C is 5 inches *always*.

B to D is the length of skirt in front (40 inches).

Sweep line 2 from B, pivoting at A.

Sweep line 3 from C, pivoting at A.

B to E is 3 inches, or one-half the width of the front gore at the top.

C to F is the same as B to E (3 inches).

F to G is one inch, or one-eighth of the amount the front gore is to be wider at the bottom than at the top.

Draw line 4 through E and G.

E to H is the length of skirt in front (40 inches).

Sweep line 5 from D, pivoting at A.

There were 13 inches in *one-half* the *waist measure*, but having used three inches in the front gore (B to E), there remain 10 inches for the side gores.

There were 9 inches of swell, but having used 1 inch in the front gore (F to G), there remain 8 inches for the side gores.

E to I is *one-half* the *waist measure* (13 inches).

Sweep line 6 from E, pivoting at I.

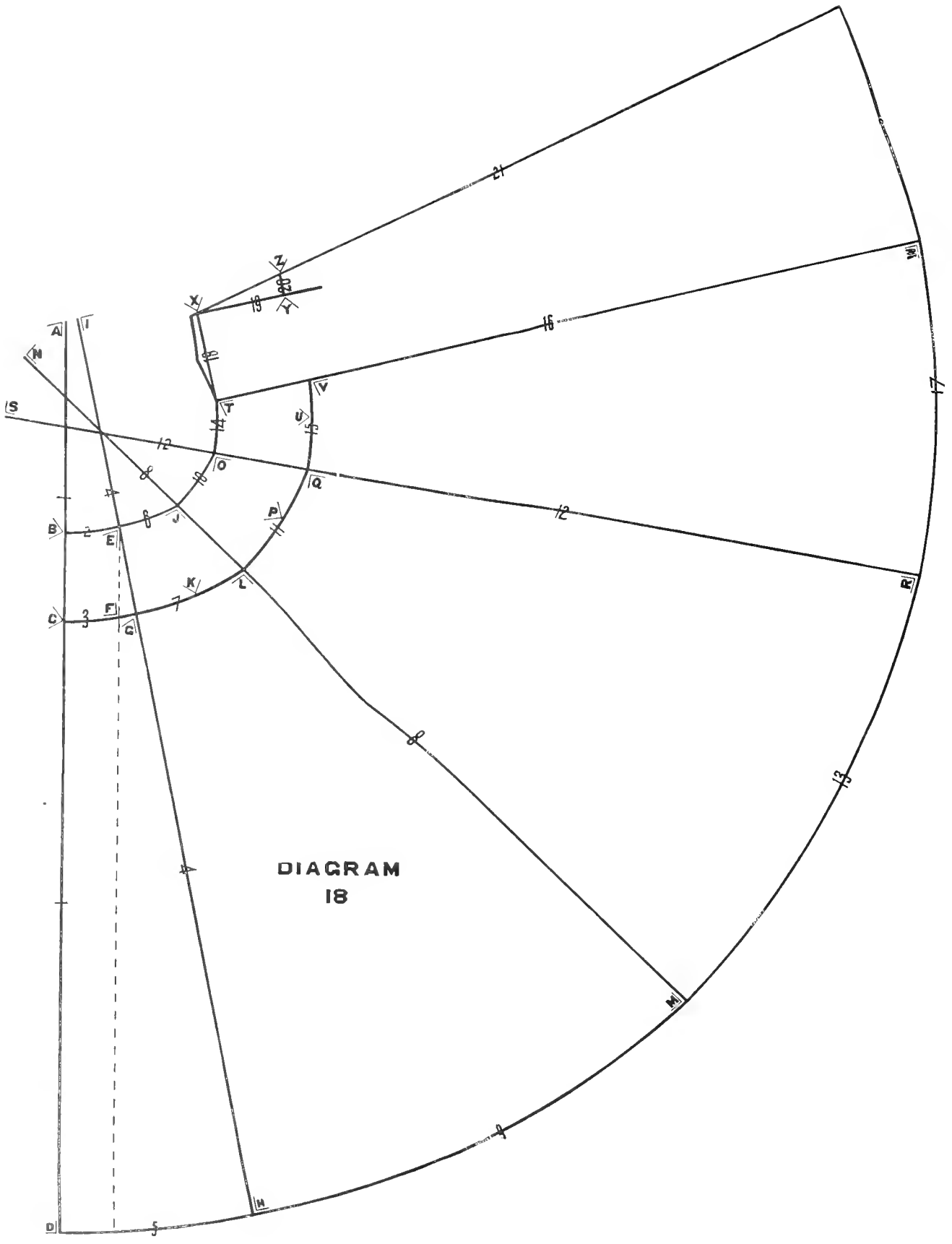
A
B
C
D
E
F
G
H
I
J
K
L
M
N
O
P
Q
R
S
T
U
V
W
X
Y
Z
DIAGRAM
18

Sweep line 7 from G, pivoting at I.

E to J is 3½ inches, or the width of the first side gore at the top.

G to K is the same as E to J (3½ inches).

K to L is 3 inches, or one-eighth of the amount the first side gore is to be wider at the bottom than at the top.

Draw line 8 through J and L.

J to M is the length of skirt on the side (40½ inches).

Sweep line 9 from H, pivoting at or near I, keeping the pivot point the same height as I, but moving it to the front or back so that the arc (line 9) will touch the two points, H and M.

After drafting the front gore, there remained of the *waist measure* 10 inches, but 3½ inches of this amount having been used in the first side gore (E to J), there remain 6½ inches for the other side gores.

After drafting the front gore, there remained of the *swell* 8 inches, but 3 inches of this amount having been used in the first side gore (K to L), there remain 5 inches for the other side gores.

J to N is *one-half* the *waist measure* (13 inches).

Sweep line 10, pivoting at N.

Sweep line 11, pivoting at N.

J to O is 3½ inches.

L to P is the same as J to O.

P to Q is 3 inches.

Draw line 12 through O and Q.

O to R is the length of skirt (40¾ inches).

Sweep line 13 from M to R, pivoting at or near N.

After drafting the front and the first side gores, there remained of the *waist measure* 6½ inches, but 3½ inches of this amount having been used in the second side gore (J to O), there remain 3 inches for the third side gore.

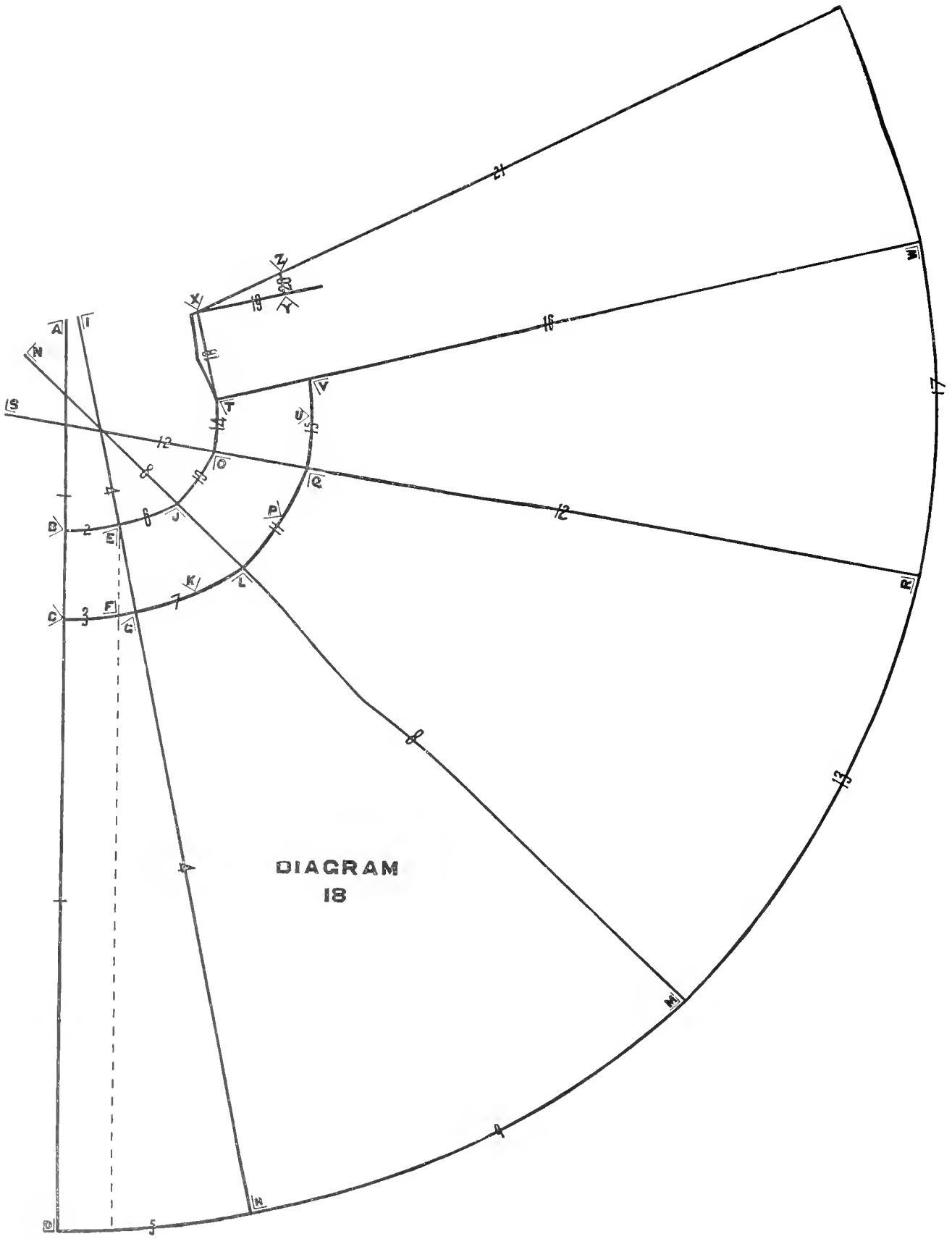
DIAGRAM
18

To make an under, or inverted box plait, proceed as follows:

Cut the paper on line 21, then fold the back gore in the centre so that line 21 will lay on line 16; then fold the back gore under the side gore by creasing the paper on line 16. This will form an under plait.

While the back gore is folded under the side gore, cut the three thicknesses of paper on line 14 at the top, and on line 17 at the bottom, giving the proper shape to the back at the top where it sews into the band, and for finishing at the bottom.

By drawing a line through points E and F down to the bottom of the skirt (as shown by dotted line on diagram), it will be parallel to line 1, because B to E is the same as C to F, and the piece thus designated will be the same width at the top and bottom; therefore the front gore having increased 1 inch (F to G) at the hip line, 5 inches below the waist line, must increase at the bottom, down 40 inches below the waist line, 8 times one inch, or 8 inches; and this increase added to the width of the gore at the top, 3 inches, gives 11 inches as the width of the gore at the bottom, from D to N.

From this demonstrated proposition the following conclusion is drawn:

If the swell or increase on each gore, at the hip line, 5 inches below the waist line, be multiplied by 8, the product will be the increase at the bottom 40 inches below the waist line, and if there be added to this amount the width of the gore at the top, the sum must equal the width of the gore at the bottom.

The first side gore increases at the hip (K to L) 3 inches, it will therefore increase at the bottom 8 times 3 inches, or 24 inches; and this added to the width at the top (E to J), 3½ inches, gives 27½ inches as the width of this gore at the bottom (N to M).

The second side gore increases at the hip (P to Q) 3 inches, and will increase at the bottom 8 times 3 inches, or 24 inches, which added to the width at the top (J to O), 3½ inches, gives 27½ inches as the width of this gore at the bottom (M to R).

The third side gore increases at the hip (U to V) 2 inches, and will increase at the bottom 8 times 2 inches, or 16 inches, which added to the width of the top (O to T) 3 inches, gives 19 inches as the width of this gore at the bottom (R to W).

The back gore increases down 5 inches, 1 inch, and will therefore increase at the bottom 8 inches, which added to the width at the top (T to X) 6 inches, gives 14 inches as the width of the back gore at the bottom.

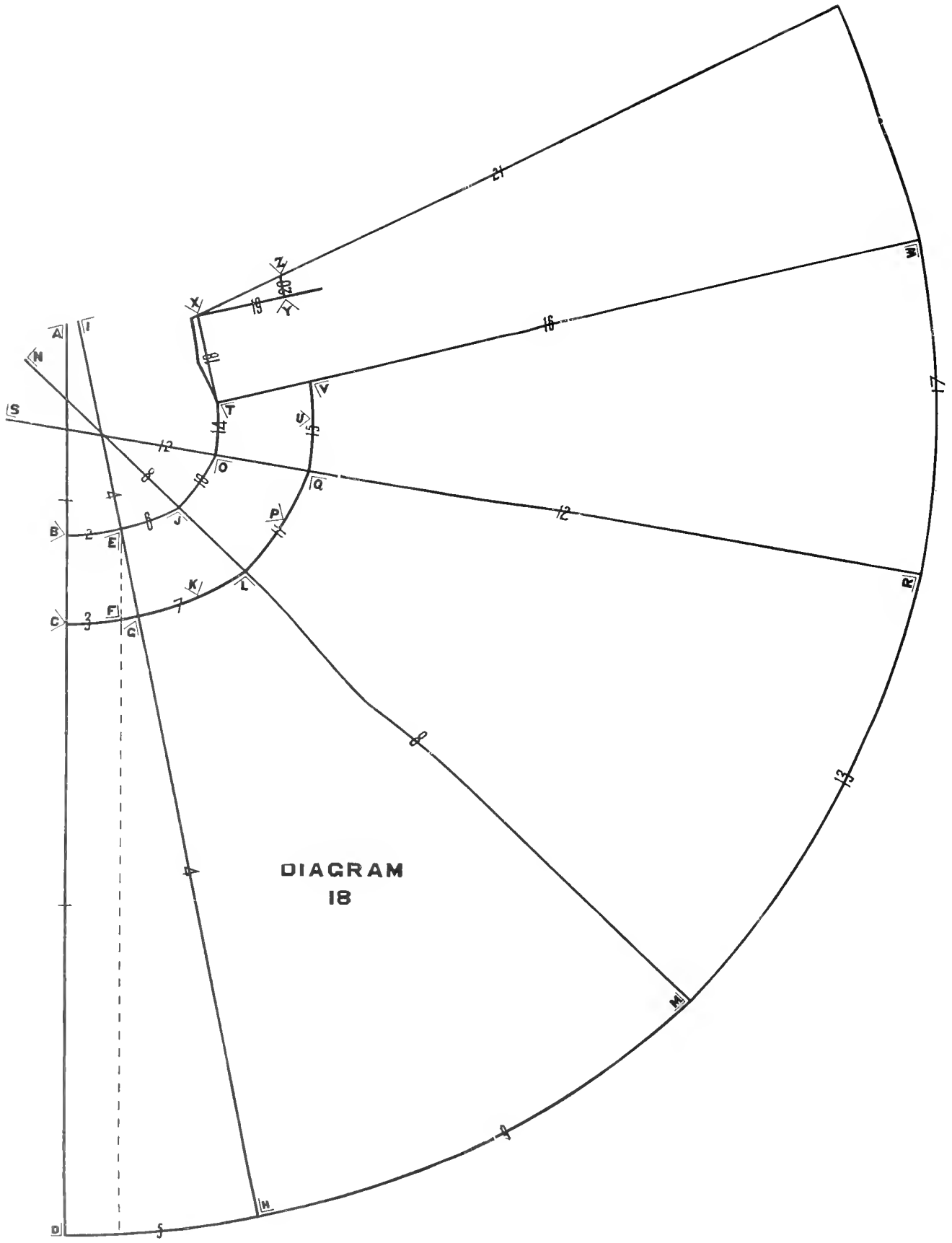
A
I
N
S
B
C
D
E
F
G
H
J
K
L
M
O
P
Q
R
T
U
V
W
X
Y
Z
DIAGRAM
18

The front gore is 11 inches wide at the bottom.

First side gore is 27 ½ inches wide at the bottom.

Second side gore is 27 ½ inches wide at the bottom.

Third side gore is 19 inches wide at the bottom.

Back gore is 14 inches wide at the bottom.

Total, 99 inches wide at the bottom for one-half of the skirt.

From these principles and illustrations we derive the following conclusions:

If the *swell* be multiplied by 8, and to this product the *waist measure* and the width of the *back gore at the bottom* be added, the sum will equal the width of the skirt at the bottom.

In the above measures the *swell* is 9 inches, which, multiplied by 8 equals 72 inches, to which is added the *waist measure* 13, and the *back gore at the bottom* 14 inches, giving 99 inches as the width of the skirt at the bottom, being the same as in diagram.

EXAMPLE 2.

Hip measure, 40 inches, divided by 2, equals 20 inches.

Waist measure, 26 inches, divided by 2, equals 13 inches.

Hip, 20 inches, minus the waist, 13 inches, equals 7 inches of swell.

Swell, 7 inches, multiplied by 8, equals 56 inches, plus the waist, 13 inches, plus the back gore, 14 inches, equals 83 inches as the size of half the skirt around the bottom. In these measures the *waist* is the same size as in example 1, but the *hip is smaller*, making the skirt *smaller* at the bottom, and establishing the fact that to *reduce the hip will reduce the bottom*, and to *increase* the *hip* will *increase* the bottom of the skirt.

EXAMPLE 3.

Hip measure, 44 inches, divided by 2, equals 22 inches.

Waist measure, 28 inches, divided by 2, equals 14 inches.

Hip, 22 inches, minus the waist, 14 inches, equals 8 inches of swell.

Swell, 8 inches, multiplied by 8, equals 64 inches, plus the waist 14 inches, plus the back gore 14 inches, equals 92 inches as the size of the skirt at the bottom. In these measures the hip is the same size as in No. 1, but the waist is larger, while the bottom of the skirt is smaller; thus establishing the fact that to *increase* the *waist* will *reduce* the *bottom*, and to *reduce* the *waist* will *increase* the bottom.

This diagram teaches how to fit a skirt around the waist and hips; how to get the proper lengths, and how to figure out how large a skirt will be at the bottom without putting in darts.

The next diagram will teach how to make a skirt any desired size at the bottom, still retaining the fit at the waist and hip.

This can be easily learned if one has fully mastered the problems thus far given, but it is useless to try to go farther until the principles herein set forth are understood, for they are the foundation of all skirt-drafting.

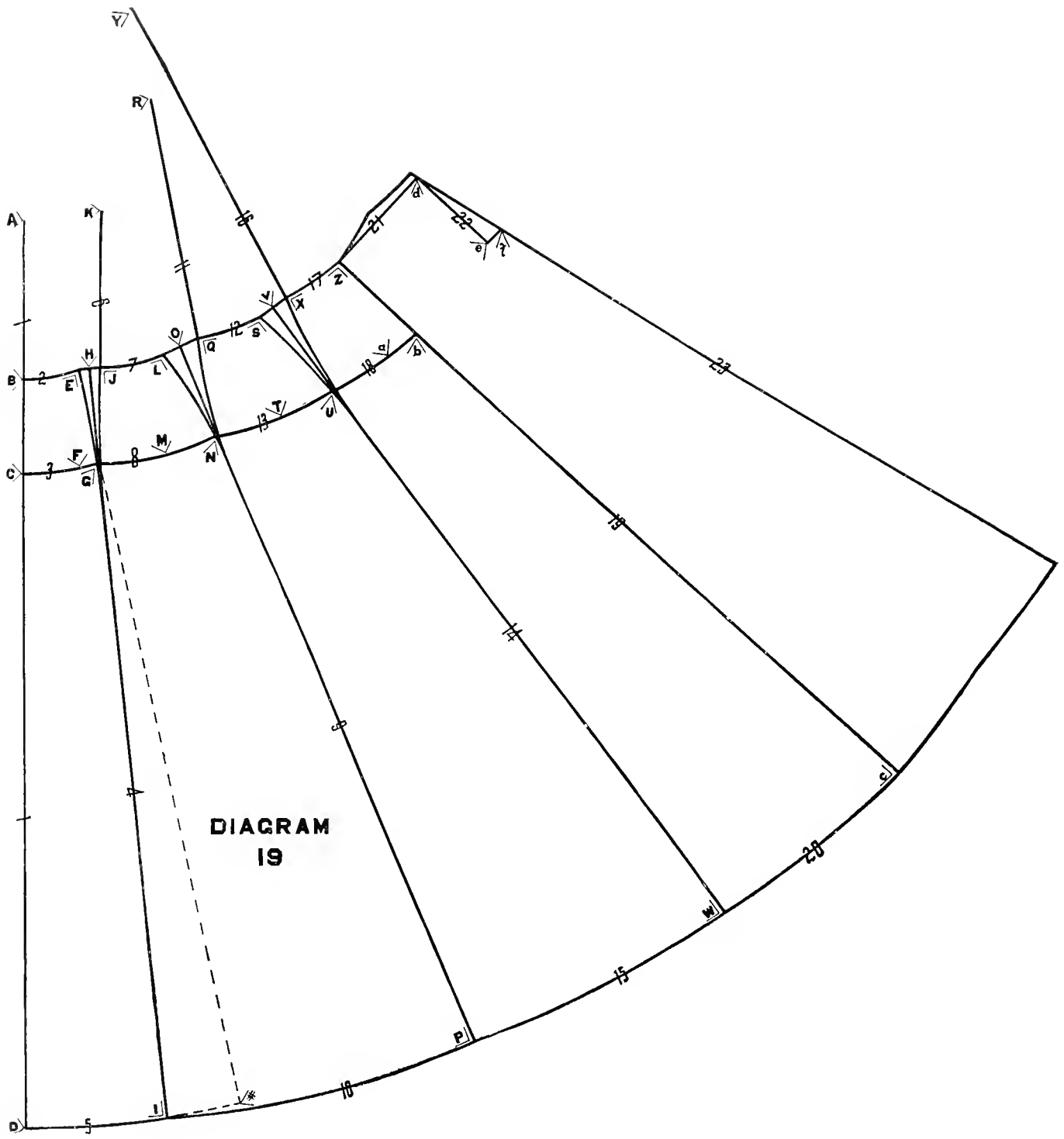
DIAGRAM
19

DIAGRAM 19.

SKIRT.

The same measures are used for this diagram as for diagram 18, in order to show the reduction at the bottom.

Hip measure, 44 inches, divided by 2, equals 22 inches.

Waist measure, 26 inches, divided by 2, equals 13 inches.

The swell (one-half the hip measure, minus one-half waist measure) equals 9 inches.

We have 13 inches of *waist measure* and 9 inches of *swell* to be divided into a front and three side gores.

In diagram 18 they were divided as follows:

Front gore, waist 3 inches, swell 1 inch.

First side gore, waist 3 ½ inches, swell 3 inches.

Second side gore, waist 3 ½ inches, swell 3 inches.

Third side gore, waist 3 inches, swell 2 inches.

Draw line 1 straight, *the length of the skirt in front* (40 inches), plus *one-third* of the *waist measure* (8⅔ inches), which equals 48⅔ inches.

A to B is *one-third* of the *waist measure* (8⅔ inches).

B to C is 5 inches *always*.

B to D is the *length* of *skirt* in *front* (40 inches).

Sweep line 2 from B, pivoting at A.

Sweep line 3 from C, pivoting at A.

B to E is the width of the front gore at the top, 3 inches.

C to F is the same as B to E.

F to G is the amount of swell in the front gore, 1 inch.

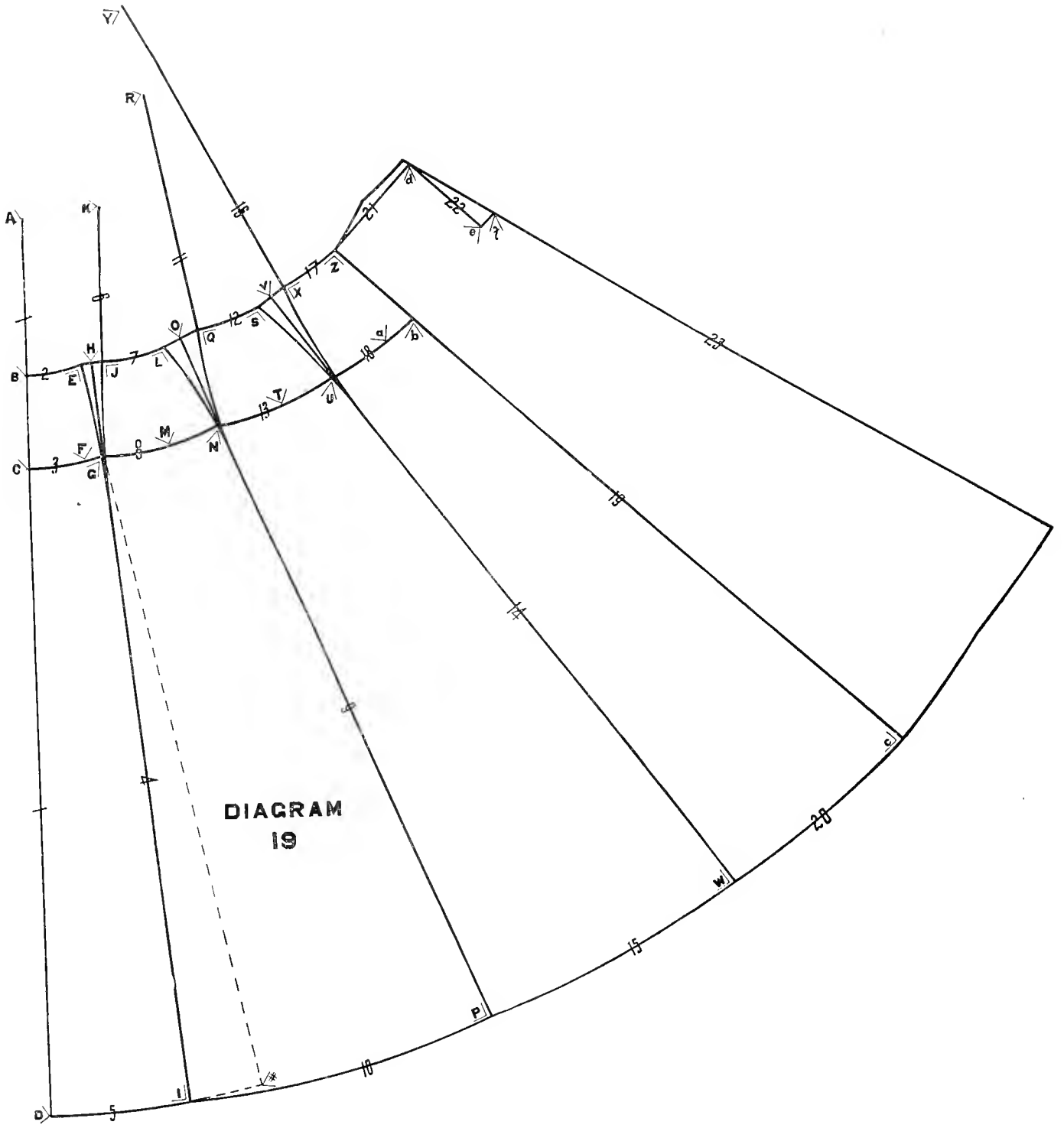
DIAGRAM
19

E to H is ½ inch, and is located in the following manner:

Place a point ½ inch from the corner of the square, on the short arm at E, letting the long arm touch at G, and draw a line from E to the corner of the square locating H, then draw line 4 with the long arm of the square from the corner at H down through G as shown in diagram. This makes the line from E to H at right angle to line 4, which is very essential.

H to I is the *length of skirt in front* (40 inches).

Sweep line 5 from D, pivoting at A.

Place the corner of the square at H, with the long arm on line 4, and draw a line from H to J, making the distance from H to J the same as H to E.

The lines running from H to E and H to J must be at right angles to line 4, and the distance from H to E must be the same as H to J, otherwise the distance from G to E would not be the same as G to J, and the darts would not sew together properly, and the curve of the waist line would be changed, thereby destroying the hang of the skirt.

Place the edge of the square on G and J, and draw line 6 up from J.

Draw the curved line from E to G with point R of the curve rule at E on the diagram.

Draw the curved line from J to G with point 7 of the curve-rule at J on the diagram.

J to K is *one-third* of the *waist measure* (8⅔ inches).

Sweep line 7 from J, pivoting at K.

Sweep line 8 from G, pivoting at K.

J to L is the width of first side gore at the top, 3½ inches.

G to M is the same as J to L.

M to N is the amount of *swell* in the first side gore, 3 inches.

L to O is 1 inch, and is located as follows:

Place a point 1 inch from the corner of the square on the short arm at L, letting the long arm touch at N, and locate O at the corner of the square. Draw line 9 from the corner of the square at O with the long arm, down through N as shown in diagram; then draw a line with the short arm of the square from O to L, thereby making the line from O to L at right angle to line 9.

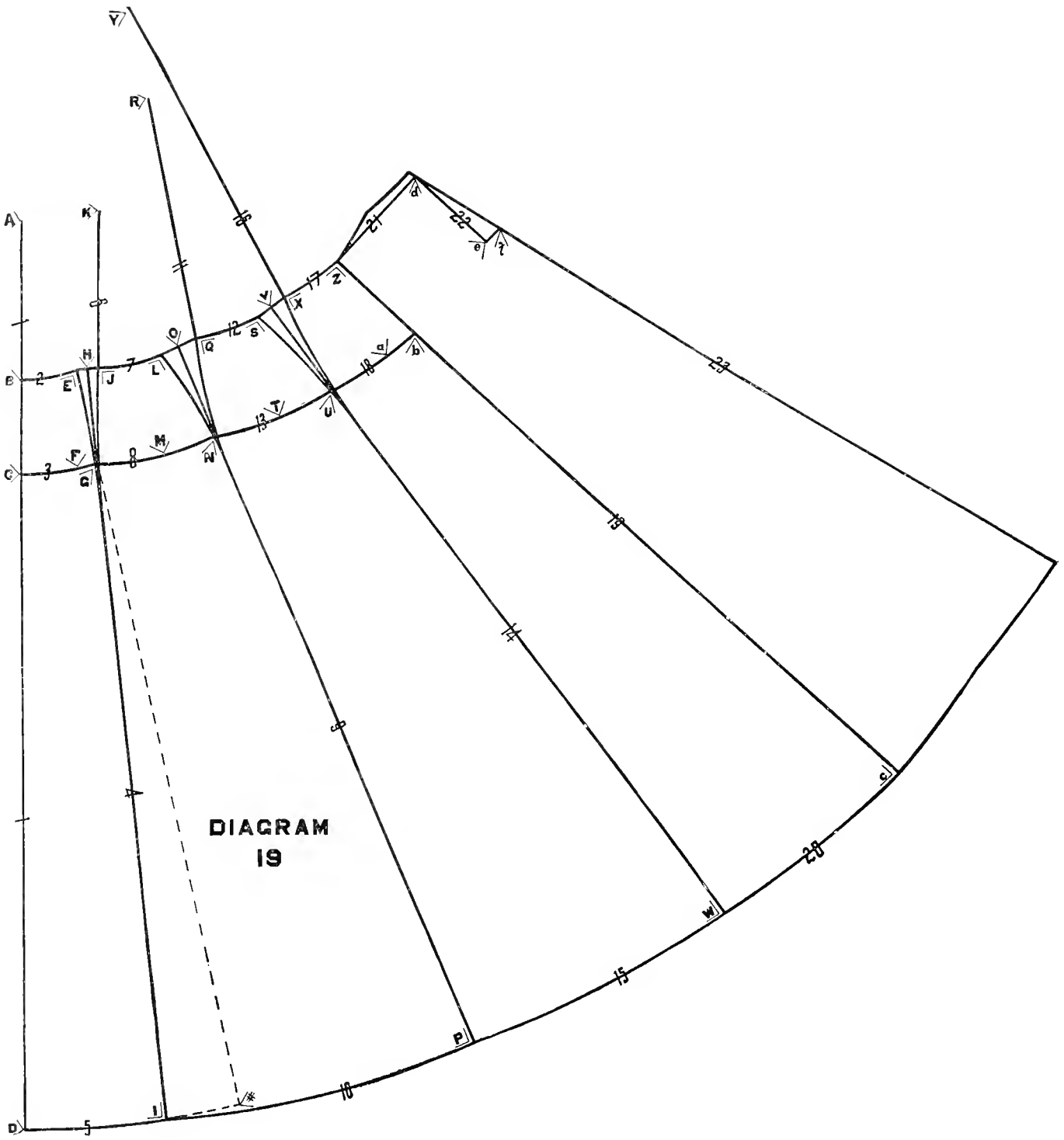
DIAGRAM
19

O to P is the *length of the skirt on the side* (40½ inches).

Sweep line 10 from I to P, pivoting at or near K.

Place the corner of the square at O, with the long arm on line 9, and draw a line from O to Q, making the distance from O to Q the same as O to L.

This will insure the distance from N to L being the same as N to Q.

Place the edge of the square on N and Q, and draw line 11 up from Q.

Draw the curved line from L to N with point W of the curve-rule at L.

Draw the curved line from Q to N with point 2 of the curve-rule at Q.

Q to R is *one-half* the *waist measure* (13 inches)

Sweep line 12 from Q, pivoting at R.

Sweep line 13 from N, pivoting at R.

Q to S is the width of the second side gore at the top, 3½ inches.

N to T is the same as Q to S.

T to U is the amount of *swell* in the second side gore, 3 inches.

Place a point ¾ of an inch from the corner of the square, on the short arm at S, letting the long arm touch at U, and locate V at the corner of the square; then draw a line from S to V with the short arm, and draw line 14 from the corner of the square at V with the long arm down through U.

V to W is the *length of skirt* (40¾ inches).

Sweep line 15 from P to W, pivoting at or near R.

Place the corner of the square at V, with the long arm on line 14, and draw a line from V to X, locating X the same distance from V as S is from V, and making the lines from V to S and V to X at right angles to line 14.

Place the edge of the square on U and X, and draw line 16 straight up from X.

Draw the curved line from S to U, with point W of the curve-rule at S.

Draw the curved line from X to U, with point 2 of the curve-rule at X.

X to Y is *three-fourths* of the *waist measure*, 19½ inches.

Sweep line 17 from X, pivoting at Y.

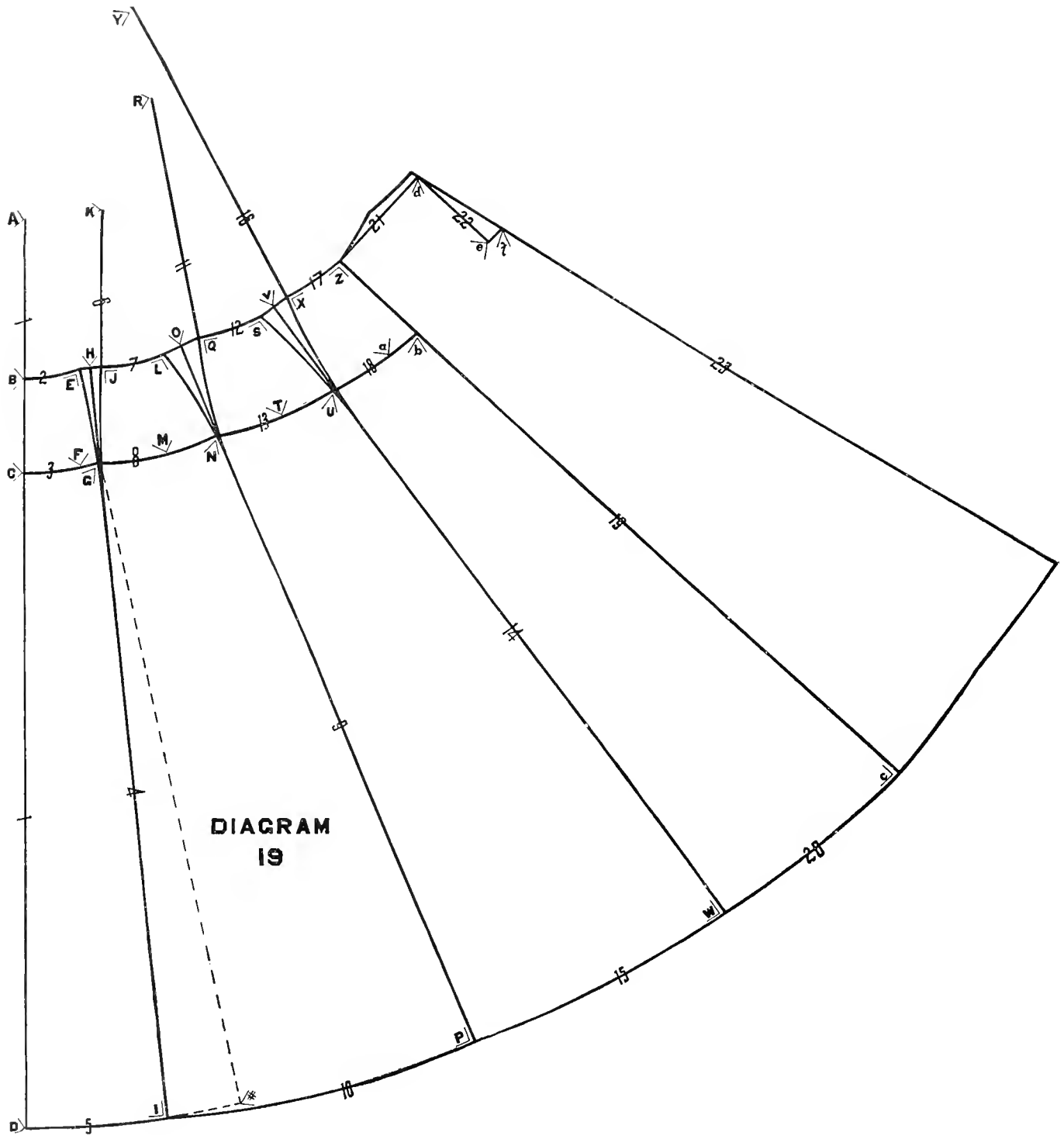
DIAGRAM
19

Sweep line 18 from U, pivoting at Y.

X to Z is the width of the third side gore, 3 inches.

U to (a) is the same as X to Z.

(a) to (b) is the amount of *swell* in the third side gore, 2 inches.

Draw line 19 straight from Z down through (b).

Z to (c) is the *length of skirt in the back* (41 inches).

Sweep line 20 from W to (c), pivoting at or near Y.

Draw line 21 at right angles to line 19.

Z to (d) is the width of the back gore at the top, 6 inches.

Draw line 22 at right angles to line 21.

(d) to (e) is 5 inches.

(e) to (f) is 1 inch, or one-eighth of the amount that the back gore should be wider at the bottom than at the top.

Draw line 23 through (d) and (f).

Fold the back gore to form an under or inverted plait, as described in diagram 18.

In this diagram the distance across the hip is the same as it is in diagram 18, and the distance across each gore at the hip is the same as in diagram 18; but the distance across the waist in this diagram is greater than it is in diagram 18, while each individual gore at the waist is the same width as it is in diagram 18. The reason for this variation is that darts have been put in between each of the gores at the waist, thereby increasing the waist in the diagram from B to Z.

In diagram 18 it has been proven that to increase the waist without changing the hip will decrease the bottom of a skirt, and as putting in darts increases the diagram at the waist, but does not change the hip, darts must therefore reduce the size of the skirt at the bottom.

It is now necessary to determine how much a dart will reduce the bottom of the skirt, so that a skirt may be drafted to any given size of waist and hip, and at the same time produce a given size of skirt at the bottom.

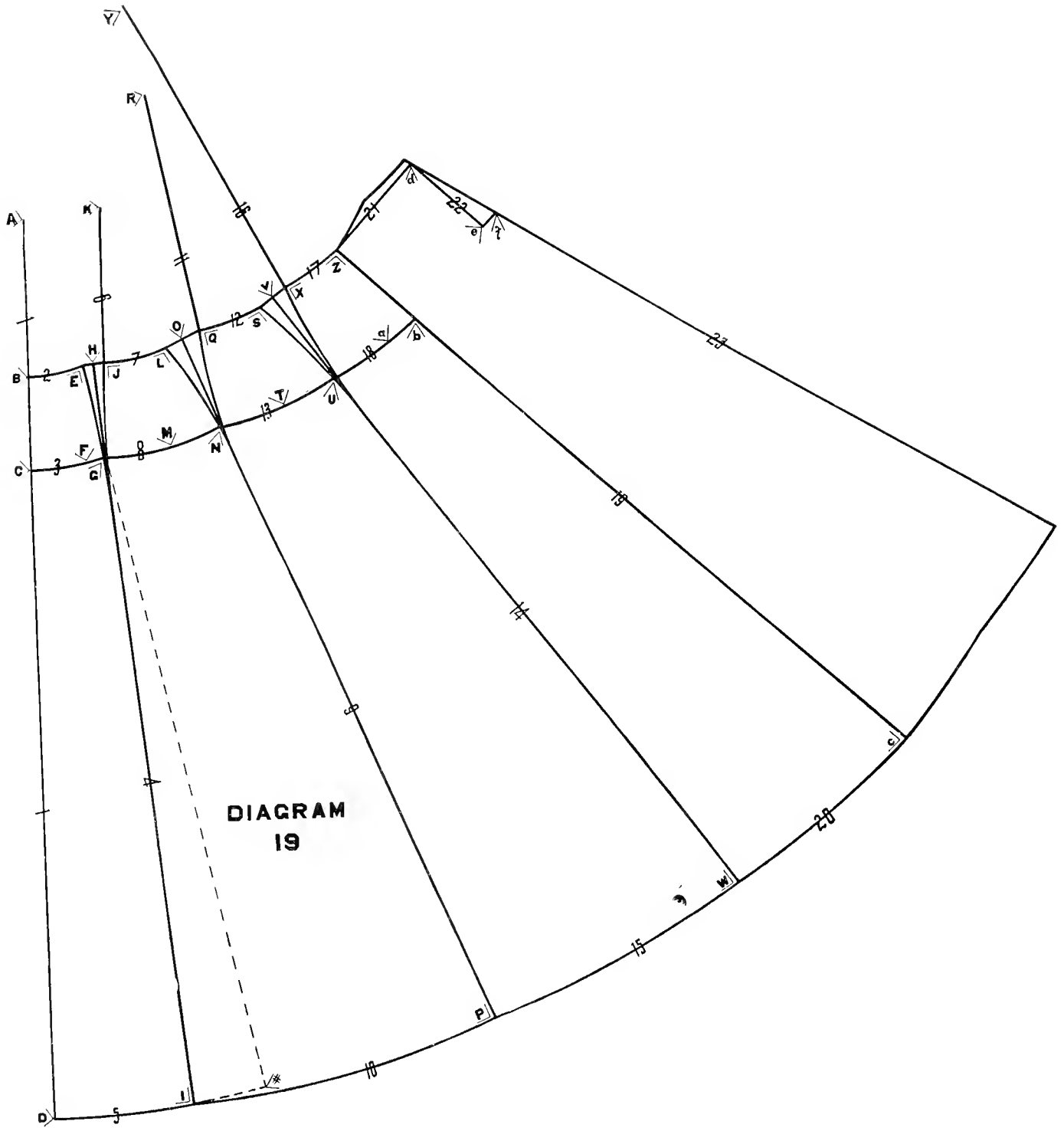
DIAGRAM
19

In diagram 18 line 4 is drawn through points E and G, as per dotted line in this diagram, giving D to ≠ as the width of front gore, but in this diagram line 4 is drawn from H through G, thereby locating I and giving D to I as the width of the front gore instead of D to ≠ as in diagram 18.

As both the dotted line and line 4 run through G, the front gore has not been reduced at the hip, but 5 inches below the hip it has been reduced the amount of the distance from E to H, namely, ½ inch, and will therefore be reduced ½ inch every 5 inches below this point, and as the bottom of the skirt is 35 inches below the hip, the bottom will be reduced 7 times the width of the dart, or 3½ inches.

Hence the conclusion that darts reduce the bottom of the skirt 7 times their width.

From this demonstrated proposition the following rule is deduced.—If the *swell* at the hip on a gore be multiplied by 8, and to this be added the width of the gore at the top, the sum will be the width that the gore would be at the bottom *without darts;* and if the *width of the dart* be multiplied by 7, and this product subtracted from the amount, the remainder will be the width of the gore at the bottom *with the dart inserted*, as in this diagram.

By the above rule the size of each gore in diagram 19 figures out as follows.—There is 1 inch of swell in the front gore at the hip line (F to G), which multiplied by 8 gives 8 inches of increase at the bottom, and to this is added the width of the gore at the top (B to E), 3 inches, giving 11 inches as the width of the gore at the bottom without dart inserted; but as there is a dart in this gore at the top of ½ inch, the gore has been reduced at the bottom 7 times ½ inch, or 3½ inches; subtracting this amount from the 11 inches gives 7½ inches as the width of the front gore at the bottom, from D to I.

In the first side gore there are 3 inches of swell (from M to N), which multiplied by 8 gives 24 inches as the amount of increase at the bottom; adding to this the width of the gore at the top (J to L), 3½ inches, gives 27½ inches as the width of the gore at the bottom without darts; but there is a dart on the front side of this gore of ½ inch (H to J), and on the back side of 1 inch (L to O), making 1½ inches of darts on this gore, which multiplied by 7 gives 10½ inches as the amount of reduction on the bottom of this gore. Subtracting this amount from the 27½ inches there remain 17 inches as the width of the first side gore at the bottom, from I to P.

In the second side gore there are 3 inches of swell (T to U), which multiplied by 8 gives 24 inches of increase at the bottom, and adding to this the width of the gore at the top (Q to S), 3½ inches, gives 27½ inches as the width of the gore at

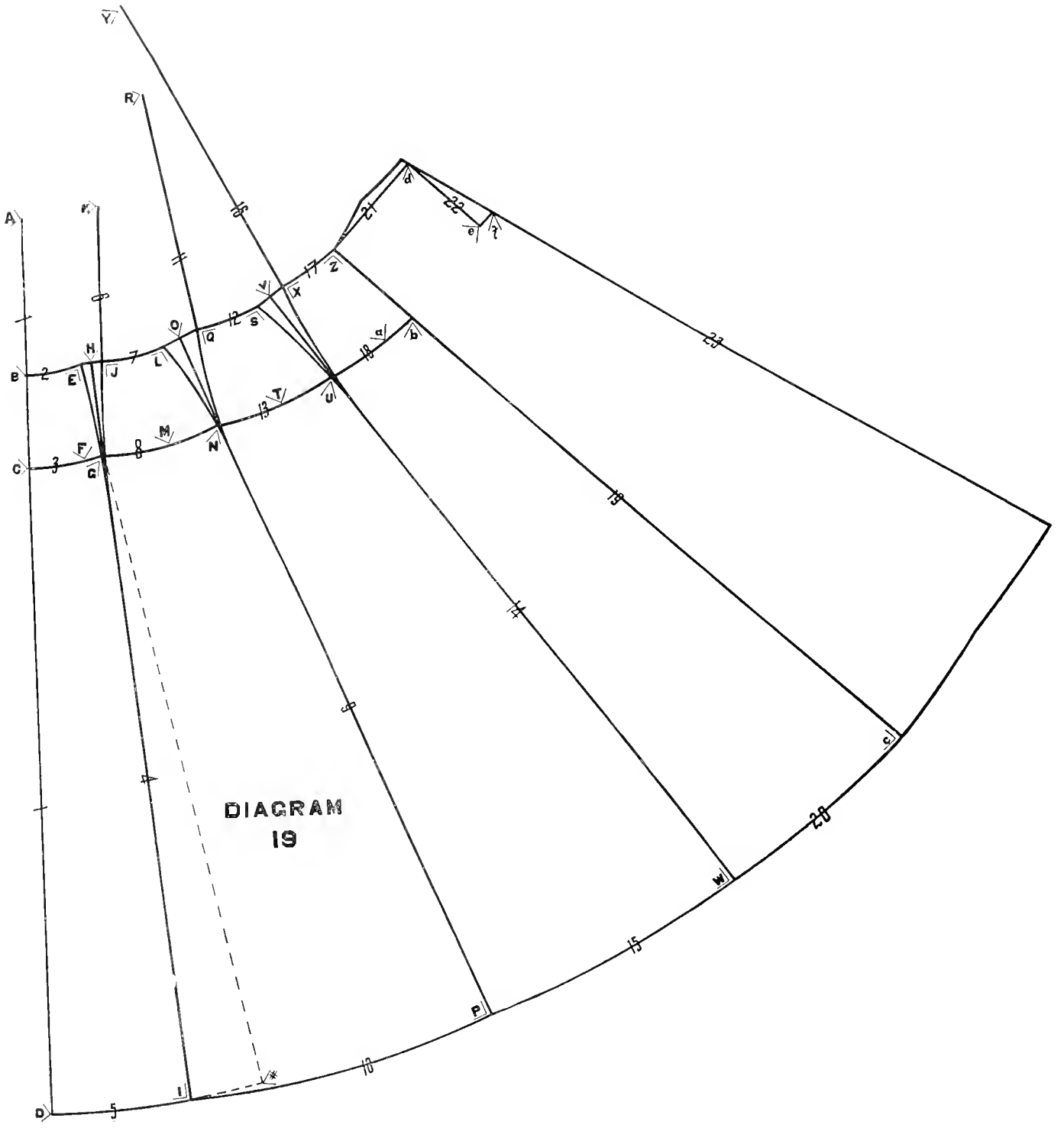
DIAGRAM
19

the bottom without darts; but as there is a dart on the front side of 1 inch (O to Q), and on the back side of $\frac{3}{4}$ of an inch, there are $1\frac{3}{4}$ inches of darts on this gore; multiplying this by 7 gives $12\frac{1}{4}$ inches as the reduction made by the darts, and subtracting this from the $27\frac{1}{2}$ inches gives $15\frac{1}{4}$ inches as the width of the second side gore at the bottom, from P to W.

In the third side gore there are 2 inches of swell, from (a) to (b), which multiplied by 8 gives 16 inches of increase at the bottom; adding to this the width of the gore at the top, 3 inches (X to Z), gives 19 inches as the width of the gore at the bottom without darts; but there is $\frac{3}{4}$ of an inch of dart on the front side of this gore (V to X), and this multiplied by 7 gives $5\frac{1}{4}$ inches as the amount of reduction at the bottom. Subtracting this from the 19 inches leaves $13\frac{3}{4}$ inches as the width of the third side gore at the bottom, from W to (c).

The back gore has 1 inch of swell (e to f), which multiplied by 8 equals 8 inches of increase at the bottom, and adding to this the width of the gore at the top, 6 inches (Z to d), gives 14 inches as the width of the back gore at the bottom, down 40 inches from the waist line.

The front gore is $7\frac{1}{2}$ inches wide at the bottom down 40 inches.

The first side gore is 17 inches wide at the bottom down 40 inches.

The second side gore is $13\frac{1}{4}$ inches wide at the bottom down 40 inches.

The third side gore is $13\frac{3}{4}$ inches wide at the bottom down 40 inches.

The back gore is 14 inches wide at the bottom down 40 inches.

Total width at bottom $67\frac{1}{2}$ inches (one-half of the skirt when finished).

In diagram 18 the same hip and waist measure are used as in this diagram, and the same width of back gore; but diagram 18 is 99 inches around the bottom while this diagram is $67\frac{1}{2}$ inches at the bottom, or $31\frac{1}{2}$ inches smaller at the bottom than diagram 18.

In diagram 18 there are no darts; but in diagram 19, from E to J, there is 1 inch of dart; from L to Q there are 2 inches of dart, and from S to X there are $1\frac{1}{2}$ inches of dart, making a total of $4\frac{1}{2}$ inches of darts in diagram 19; and as darts reduce the bottom of a skirt 7 times their width, these darts will necessarily reduce the bottom $31\frac{1}{2}$ inches.

Therefore to draft a skirt to a desired size at the bottom, with a given size at the hip and waist.—First, find out how wide the skirt would be at the bottom without darts; then subtract from this amount the *desired size* at the bottom, and

the remainder will be the amount of *surplus* to be taken out by the darts, and as darts reduce the bottom 7 times their width, in order to reduce the bottom a certain amount the darts inserted must be *one-seventh* of that amount. Hence the following rule:

Multiply the *swell* by 8, and to this product add the *waist* and the *width* of the *back gore* at the *bottom*; the sum will equal the size of the skirt at the bottom *without darts*. From this amount subtract the *desired size* at the bottom, and the *remainder* will be the surplus to be taken out by the *darts*.

Divide this *surplus* by 7, and the quotient will be *the amount* for *darts*.

EXAMPLE 1.

Hip measure 44 inches, divided by 2, equals 22 inches.

Waist measure 26 inches, divided by 2, equals 13 inches.

Hip 22 inches, minus 13 inches (waist measure), equals 9 inches of swell.

Swell 9 inches, multiplied by 8, equals 72 inches, plus 13 (the waist), plus 14 (the back gore), equals 99 inches, the size of the skirt without darts.

99 inches minus 67 ½ inches (the desired size) equals 31 ½ inches surplus.

Surplus 31 ½ divided by 7 equals 4 ½ inches as the amount for darts.

EXAMPLE 2.

Hip measure 41 divided by 2 equals 20 ½ inches.

Waist measure 24 divided by 2 equals 12 inches.

Hip measure 20 ½ minus 12 equals 8 ½ swell.

Swell 8 ½ multiplied by 8 equals 68 plus 12 (waist), plus 16 (back gore), equals 96 inches. (Size without darts.)

96 minus 72 (desired size) equals 24 inches of surplus.

Surplus 24 divided by 7 equals 3 3-7 inches, the amount for darts.

EXAMPLE 3.

Desired size of skirt around the bottom, 3 ½ yards, with a 12 inch back gore.

One-half of skirt 63 inches. Hip measure 40 inches. Waist measure 22 inches.

Hip 40 divided by 2 equals 20.

Waist 22 divided by 2 equals 11.

20 minus 11 equals 9 swell.

Swell 9 multiplied by 8 equals 72 plus 11, plus 12, equals 95 inches, width of skirt without darts.

95 minus 63 equals 32 (surplus), divided by 7 equals 4 4-7 inches for darts.

Darts are placed between the front gore and the first side gore, and between each of the side gores; therefore there will be as many darts as there are side gores. Thus if there are two side gores, there will be two darts, and if there are three side gores, there will be three darts; while a skirt that has four side gores will have four darts.

In dividing the amount for darts into the several darts, care and judgment should be used, the following being the rule to govern the same:

If the form is perfectly round, the amount for darts should be divided equally, but if the form is flat in front with large hips on the side, and medium full in the back, the front dart should be small, the second dart large, and the third dart medium in size.

On the form that is very full in the front, medium full on the side, and quite flat in the back, make the first and second darts about the same size, with a small dart for the back or third dart.

A skirt may be drafted with as many gores as the style and taste require by simply dividing the waist measure into as many parts as it is desired to have gores, and at the same time these gores may be proportioned to suit the taste; that is to say, they may be of equal width, or some may be wider than others.

Diagram 19 illustrates a 9 gored skirt, there being one front gore, 6 side gores, and 2 back gores; but it may be cut as a 7 gored skirt by leaving the third side gore and the back gore together. It may also be used for a circular, or one piece skirt, by leaving the pattern together as shown in the diagram, and not cutting through on the lines that separate the gores.

This will leave the darts running from the waist to the hip.

By this it will be seen that any two or more gores may be cut together and that this diagram may be used for a 1, 3, 5, 7, or 9 piece skirt.

In other words, there is no difference between a one piece and a 9 gored skirt, as far as drafting the pattern is concerned.

THE HANG OF THE SKIRT.

So far in this treatise on skirts, only the fit has been taken into consideration, but the fit is not all there is to a skirt, for a skirt may fit, but not hang in the proper manner to conform to the prevailing style.

At one time the styles may call for a skirt hanging full in front and at the sides, forming ripples at the bottom; at another time they will be plain in front with ripples on the side; and at still another period they will be plain both in the front and on the sides.

In fact, the style of a skirt is mostly in the hang of the same, and this is controlled by the distance from the waist line to the pivot point, or in other words, by the length of the radius of the waist circle.

In diagram 19, on the first side gore, the waist line (line 7) is pivoted at K, and the distance from J to K is one-third of the waist measure ($8\frac{2}{3}$ inches); had the distance from J to K been one-half the waist measure (13 inches) point L would be lower than it is in the diagram, which would draw the front gore back, making it fit more closely at the knees and feet.

On the contrary, had the distance from line 7 to the pivot point been one-fourth of the waist measure, point L would have been raised, and this would have forced the front gore forward, making it full in the centre front at the bottom.

Each side gore controls the hang of the gore immediately in front of it, and as there is an individual pivoting point for each side gore, the hang of the skirt at any given point may be controlled by the distance from which the side gore is pivoted.

Hence the following rule:

To draw the skirt back and make it close at the feet and knees, pivot from a greater portion of the waist measure.

To throw the skirt to the front and produce ripples at the bottom, pivot from a lesser portion of the waist measure.

There are three distinct forms, on which the waist and hip measures may be the same, namely, the regular form on which the waist line runs level, or straight around the person, the form with the waist line high in the front and low in the back, and the form with the waist line high in the back and low in the front. The distance from which to pivot for each one of these forms must be varied, otherwise the skirts will not hang the same on the different forms.

If on the regular form, on which the waist line runs straight around, the skirt is pivoted as in diagram 19, from $\frac{1}{3}$, $\frac{1}{3}$, $\frac{1}{2}$, and $\frac{3}{4}$ of the waist measure, on the form having the waist line high in front and low in the back, the distance from which to pivot should be $\frac{1}{3}$, $\frac{1}{2}$, $\frac{3}{4}$, and the full waist measure, while on the form with the waist line high in the back and low in front, the distance from which to pivot should be $\frac{1}{4}$, $\frac{1}{4}$, $\frac{1}{3}$ and $\frac{1}{2}$ of the waist measure.

These variations of the waist line may generally be determined by the skirt lengths, in the following manner: On the form with the waist line running straight around the front length, taken to the carpet, will ordinarily be one inch shorter than the back length, and if the front length is longer than the back it is evident that the waist line is high in front and low in the back, but if the front length is very short, compared with the back length, the waist line must be high in the back and low in the front.

These instructions regarding variations depend on the accuracy of the measurements, and unless the directions for taking measures have been followed, they are of no consequence.

For a bicycle skirt it is necessary that it hang full in the centre front, plain on the sides, and full in the back; therefore the distance from the waist line to the pivot point for the first side gore should be less, and for the last side gore should be more than for a regular skirt.

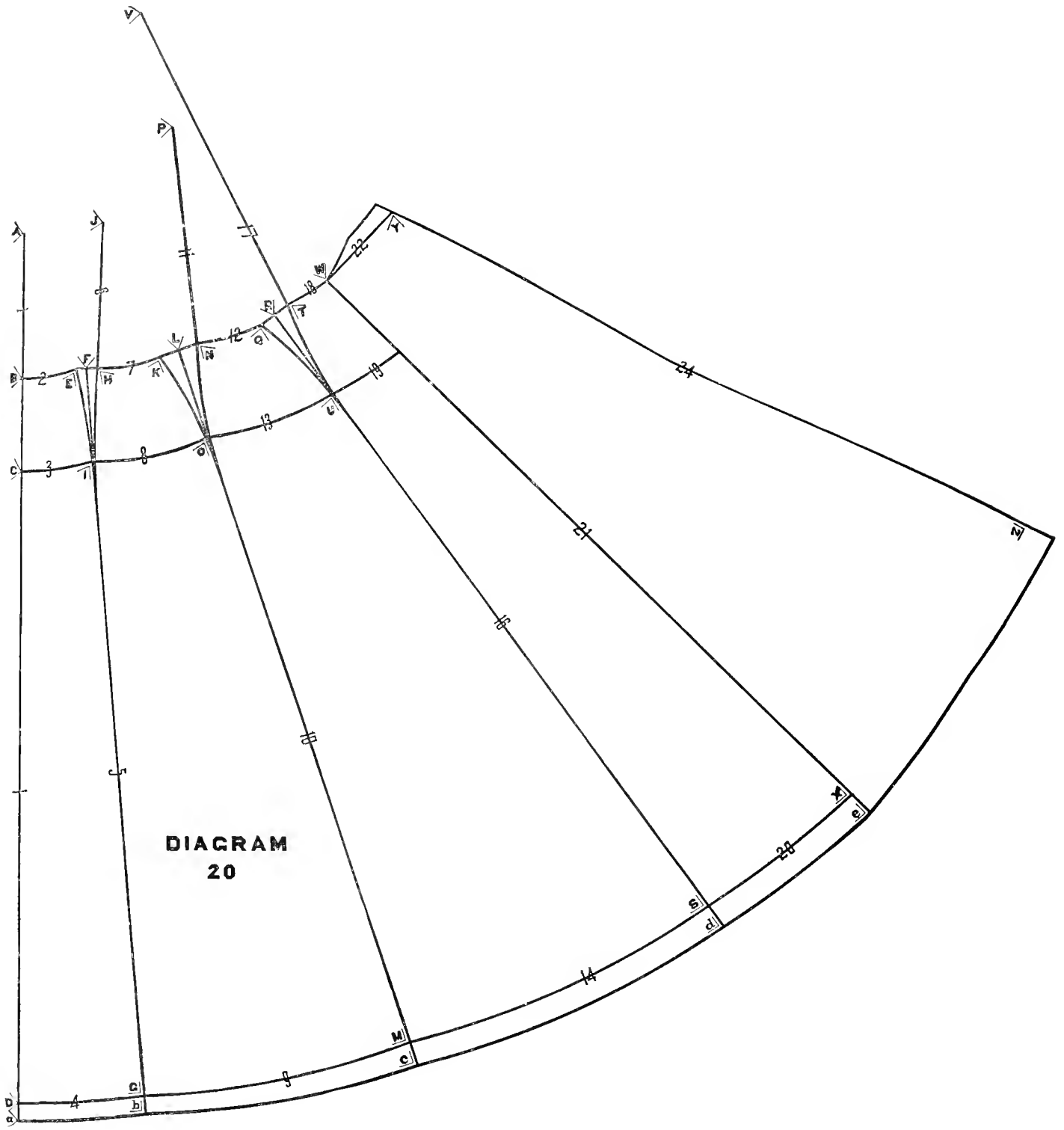
DIAGRAM
20

DIAGRAM 20.

Having already demonstrated that if the *waist measure* together with the *proper width* of *darts* be carried out on the *waist line*, and the *hip measure* be carried out on the *hip line*, the bottom of the skirt (down 40 inches from the waist line) must be the *desired width*. Therefore, if the *waist measure* together with the *same darts* be carried out on the *waist line*, and the proper amount be carried out in width of gores at the bottom (down 40 inches from the waist line), the result must give the correct size of *hip* on the hip line.

ILLUSTRATION.

If in diagram 19, a straight line be drawn from H through G down to the bottom of the skirt, it will locate I. Therefore if a straight line be drawn from H to I it must locate G, and from this demonstrated fact we adopt the following method of drafting skirts in order to save time:

Hip measure 43 divided by 2 equals 21 ½.

Waist measure 24 divided by 2 equals 12.

Hip 21 ½ minus 12 (the waist) equals 9 ½ swell.

Swell 9 ½ multiplied by 8 equals 76 plus 12 (waist), plus 19 (the back gore), equals 107, width without dart.

107 minus 72 (desired size) equals 35 inches of surplus.

Surplus 35 divided by 7 equals 5 inches for darts.

As there are three darts in a 9 gored skirt, divide the amount for darts as follows:

First dart 1 ¼ inches, ⅝ of an inch on the front gore, and ⅝ on the first side gore.

Second dart 2 inches, 1 inch on the first side gore, and 1 inch on the second side gore.

Third dart 1 ¾ inches, ⅞ on the second side gore, and ⅞ on the third side gore.

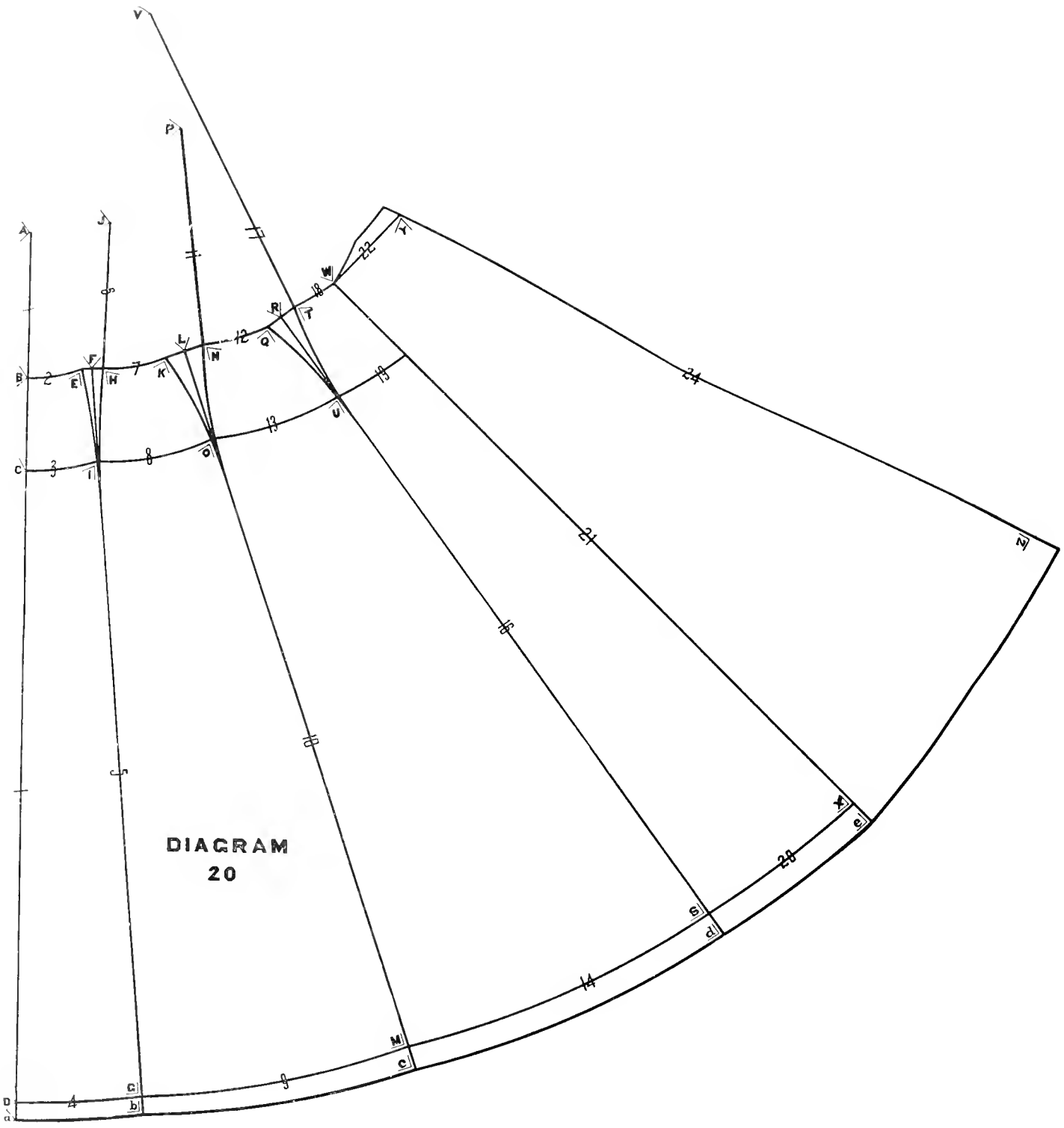
DIAGRAM
20

There are 12 inches of waist measure, which may be divided as follows, or as desired:

Front gore 3 inches, first side gore $3\frac{1}{4}$ inches, second side gore $3\frac{1}{4}$ inches, third side gore $2\frac{1}{2}$ inches.

There are 72 inches for the bottom of the skirt, and subtracting 19 inches from this for the back gore, there remain 53 inches for the front and side gores, which may be divided as follows or to suit the taste:

Front gore at the bottom $7\frac{1}{2}$ inches.

First side gore at the bottom $17\frac{1}{2}$ inches.

Second side gore at the bottom 18 inches.

Third side gore at the bottom 10 inches.

THE FOLLOWING IS A FULL PLAN FOR THE SKIRT:

Front gore at *top* 3 inches, at *bottom* $7\frac{1}{2}$ inches, *dart* $\frac{5}{8}$ of an inch.

First side gore at *top* $3\frac{3}{4}$ inches, at *bottom* $17\frac{1}{2}$ inches, *dart* $\frac{5}{8}$ and 1 inch.

Second side gore at *top* $3\frac{1}{4}$ inches, at *bottom* 18 inches, *dart* 1 inch and $\frac{7}{8}$ inch.

Third side gore at *top* $2\frac{1}{2}$ inches, at *bottom* 10 inches, *dart* $\frac{7}{8}$ of an inch.

Back gore at *top* 5 inches, at *bottom* 19 inches.

Draft the skirt as follows:

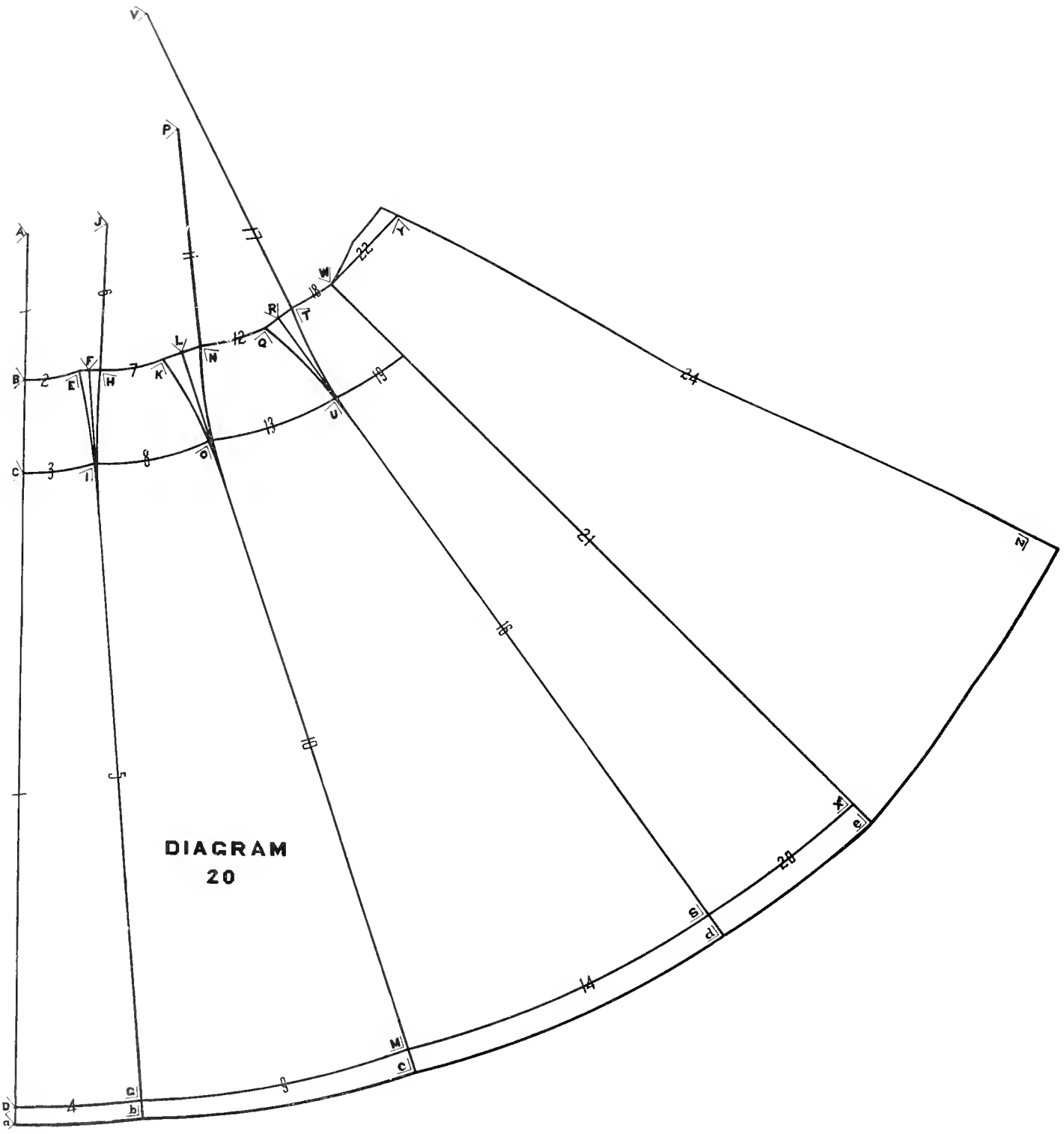
DIAGRAM
20

Draw line 1 the length of skirt in front, 40 inches plus $\frac{1}{3}$ of the waist measure (8 inches), which equals 48 inches.

A to B is *one-third* of the *waist measure*, 8 inches.

B to C 5 inches *always*.

B to D is 40 inches.

Sweep lines 2, 3 and 4, pivoting at A.

B to E is the width of the front gore at the top, 3 inches.

E to F is the amount of dart on the front gore, $\frac{5}{8}$ of an inch.

D to G is the width of the front gore at the bottom, $7\frac{1}{2}$ inches.

Draw line 5 straight from F to G in the following manner:

Place the edge of the long rule against the long arm of the square, with a point $\frac{5}{8}$ of an inch from the corner on the short arm, touching at E, while the edge of the rule next to the square is on G; locate F at the corner of the square, and draw line 5 from F down through G, with the long arm of the square and the edge of the rule; then draw the line from E to F with the short arm of the square, which will make this line at right angle to line 5.

Place the corner of the square at F, with the long arm on line 5, and draw the line from F to H, making the distance from F to H the same as F to E.

Place the edge of the square on H and I, and draw line 6 up from H.

Draw the curved dart line from E to I with point R of the curve-rule at E.

Draw the curved dart line from H to I with point 7 of the curve-rule at H.

H to J is *one-third* of the *waist measure*, 8 inches.

Sweep lines 7, 8 and 9, pivoting at J.

H to K is the width of the first side gore at the top, $3\frac{1}{4}$ inches.

K to L is the amount of dart for the back side of the first side gore, 1 inch.

G to M is the width of the first side gore at the bottom, $17\frac{1}{2}$ inches.

Draw line 10 straight from L to M, as follows:

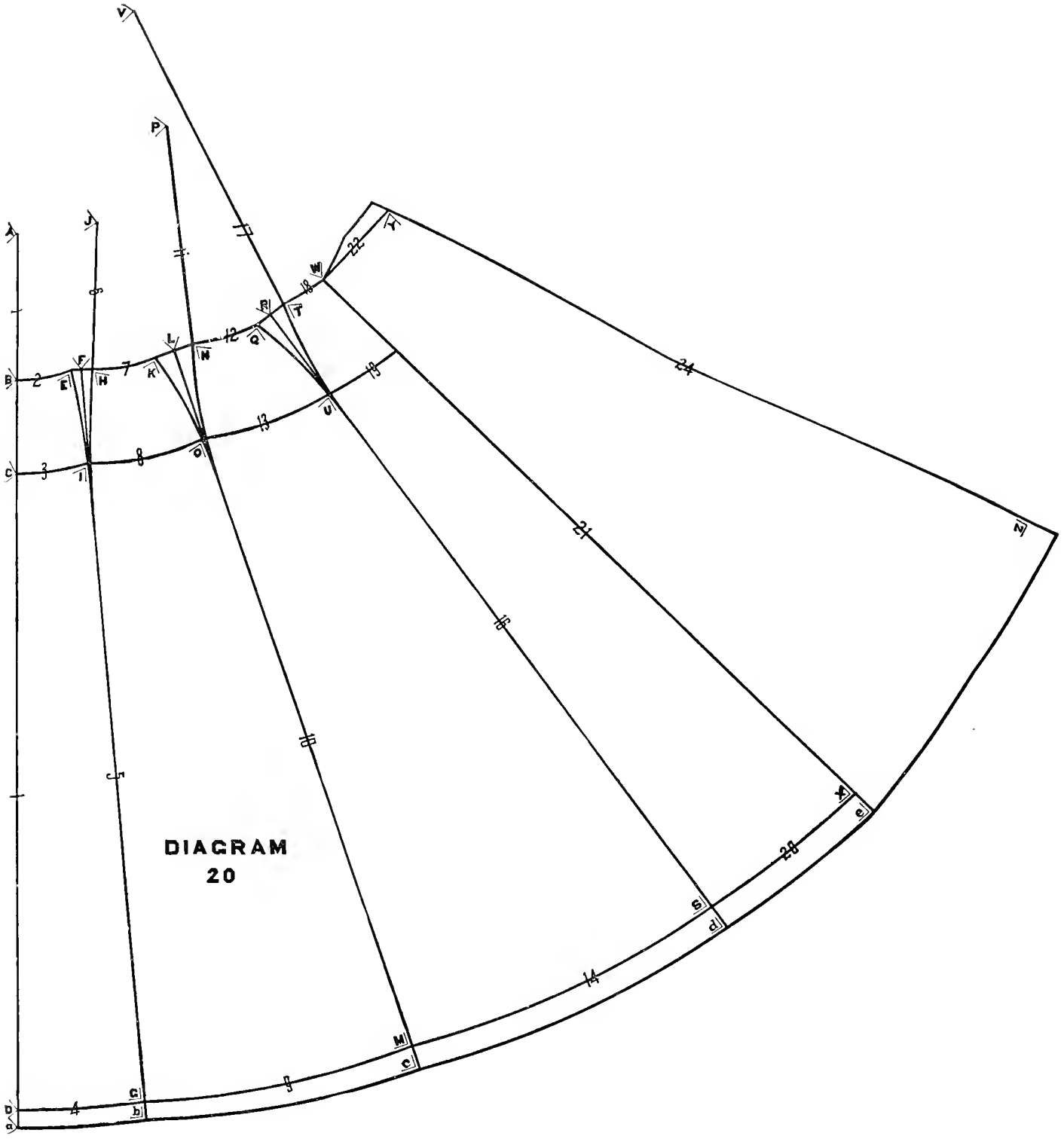
DIAGRAM
20

Place the long rule against the long arm of the square, with a point 1 inch from the corner, on the short arm at K, while the edge of the rule next to the square is on M; locate L at the corner of the square, and draw line 10 from L down through M with the long arm of the square and the rule; then draw the line from K to L, with the short arm of the square, thereby making the line from L to K at right angle to line 10.

Place the corner of the square at L with the long arm on line 10, and draw the line from L to N, making the distance from L to N the same as L to K.

Draw the curved dart line from K to O with point w of the curve-rule at K.

Draw the curved dart line from N to O with point 2 of the curve-rule at N.

Place the edge of the square on O and N, and draw line 11 up from N.

N to P is *one-half of the waist measure*, 12 inches.

Sweep lines 12, 13 and 14, pivoting at P.

N to Q is the width of the second side gore at the top, 3¼ inches.

Q to R is one-half of the third dart, ⅞ of an inch.

M to S is the width of the second side gore at the bottom, 18 inches.

Draw line 16 straight from R to S in the following manner:

Place the long rule against the long arm of the square, with a point ⅞ of an inch from the corner on the short arm, touching at Q, while the edge of the rule next to the square is on S; locate R at the corner of the square, and draw line 16 from R down through S with the long arm of the square together with the rule; then draw the line from Q to R with the short arm of the square, thus making the line from R to Q at right angle to line 16.

Place the corner of the square at R with the long arm on line 16, and draw the line from R to T, making the distance from R to T the same as R to Q.

Draw the curved dart line from Q to U with point W of the curve-rule at Q.

Draw the curved dart line from T to U with point 2 of the curve-rule at T.

Place the edge of the square on T and U, and draw line 17 up from T.

T to V is *three-fourths of the waist measure*, 18 inches.

Sweep lines 18, 19 and 20, pivoting at V.

T to W is the width of the third side gore at the top, 2½ inches.

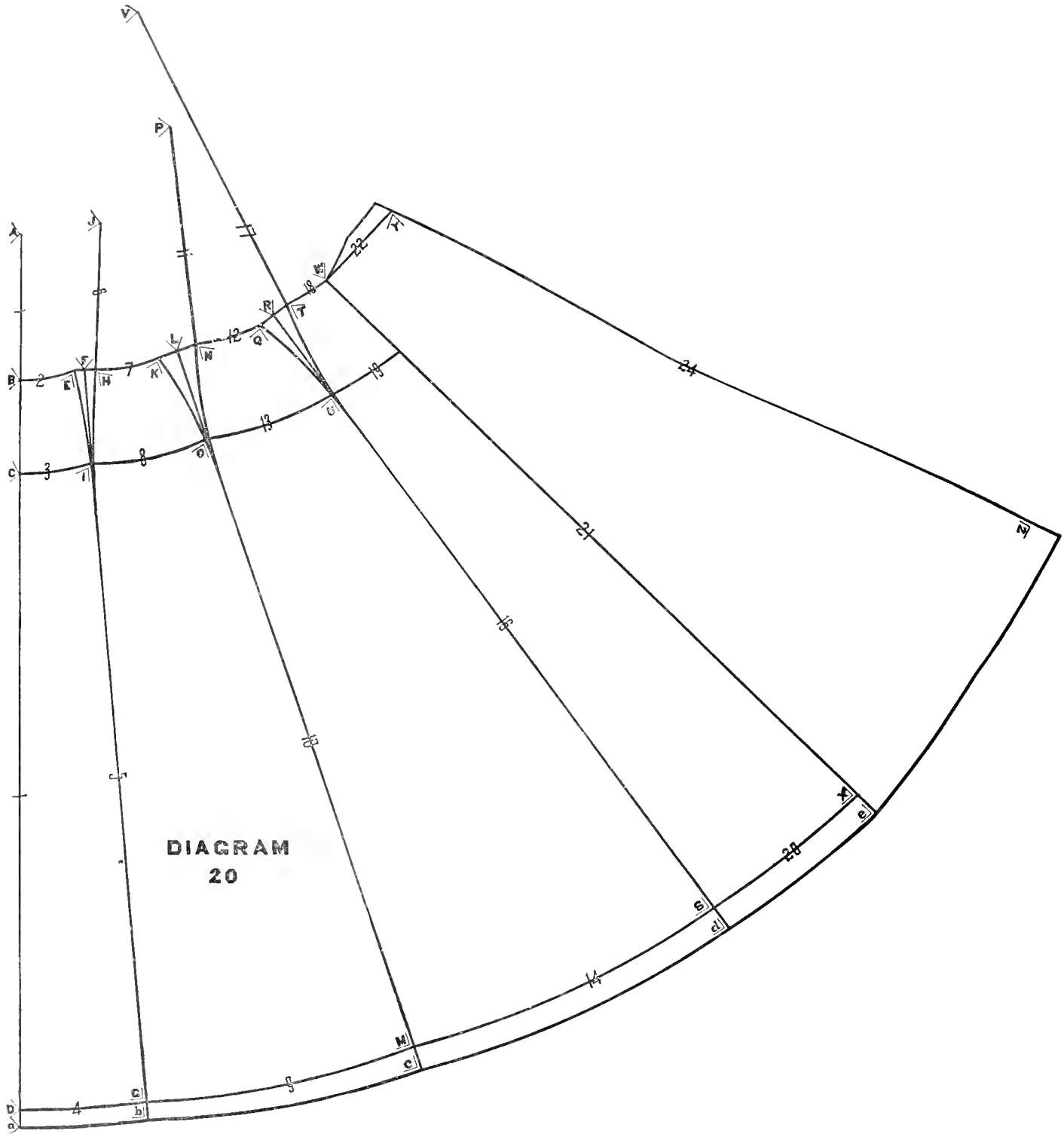
DIAGRAM
20

S to X is the width of the third side gore at the bottom, 10 inches.

Draw line 21 straight from W to X.

Draw line 22 at right angle to line 21.

W to Y is the width of the back gore at the top, 5 inches.

X to Z is the width of the back gore at the bottom, 19 inches.

Draw line 24 straight through points Y and Z.

The skirt as now drafted is 40 inches long at all points; proceed to carry out the proper length by shortening or lengthening as the measures may require, according to the following instructions:

Measure down line 1 from B, the length of skirt in front, establishing (a).

Measure down line 5 from F, the length of skirt in front, establishing (b).

Sweep a line from (a) to (b), pivoting at A.

Measure down from L on line 10 the length of skirt on the side, locating (c).

Sweep a line from (b) to (c), pivoting at or near J.

Measure down from R on line 16 the desired length of skirt, locating (d).

The length of skirt on line 16 should be midway between the length of the skirt in the back and the side length; in this diagram the side length is 41½ inches, and the back length is 42 inches, therefore the length on line 16 should be 41¾ inches.

Sweep a line from (c) to (d), pivoting at or near P.

Measure down from W on line 21 the length of skirt in the back, establishing (e).

Sweep a line from (d) to (e), pivoting at or near V.

Cut the paper on line 24 and fold to line 21, forming the under plait as described in previous diagram.

In figuring out the skirt problem it is always figured on the basis of a skirt 40 inches in length; this is because it is an intermediate length.

When the styles call for a skirt to be four yards around the bottom, that means for a skirt 40 inches long, and a person wearing a longer skirt should have one proportionately wider, while a shorter person should have a narrower skirt. These diagrams will give this increase and decrease when figured on basis of 40-inch skirt length.

After considerable practice with this method of drafting a skirt, one may draft the pattern in sections; that is to say, a gore at a time, permitting the use of narrower paper by proceeding as follows:

Draft the front gore and cut it out. Lay this gore with the reverse side up on another sheet of paper, and mark along the edge of the gore from E to I, and thence down on line 5 to the bottom of the gore, making a point at E, I and (b). This will give the front side of the first side gore, and the points designated will be H, I and (b) on the front side of the first side gore. Having the front side of the first side gore, proceed to draft the remainder of the gore as in diagram 20.

Draft each gore in the same manner, using the back side of each gore to shape the front side of the gore following it.

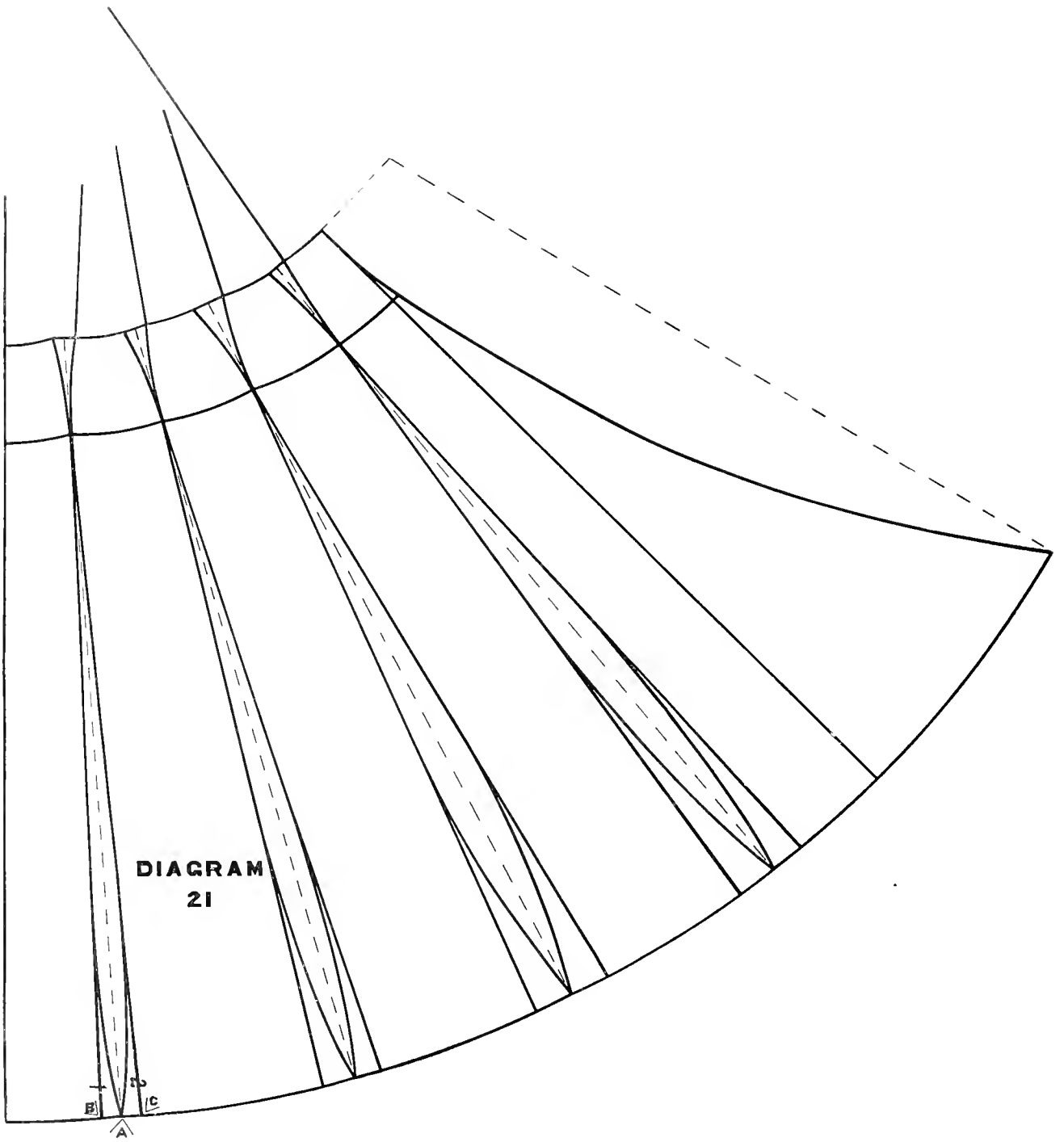
DIAGRAM
21
B
C
A

DIAGRAM 21.

ELEVEN GORED SKIRT WITH FLARE AT THE BOTTOM.

Hip measure 42 divided by 2 equals 21.

Waist measure 25 divided by 2 equals 12 ½.

Hip 21 minus 12 ½ equals 8 ½ swell.

Swell 8 ½ multiplied by 8 equals 68.

68 plus 12 ½ (waist) plus 14 (back gore) equals 94 ½ inches (width at bottom without darts).

94 ½ minus 63 (desired width) equals 31 ½ inches of surplus.

Surplus 31 ½ divided by 7 equals 4 ½ inches for darts.

As there are four darts in an eleven-gored skirt, divide the amount for darts as follows:

First dart 1 inch, second dart 1 inch, third dart 1 ½ inches, fourth dart 1 inch.

There are 12 ½ inches of waist measure to be divided into a front and four side gores, making 5 gores; which may be divided equally, giving 2 ½ inches for each gore, or in any manner desired.

There are 63 inches for the bottom of the skirt, and as 14 of this amount is in the back gore, there are 49 inches for the front and side gores, which may be divided as follows: Front gore 6 inches, first side gore 12 inches, second side gore 12 inches, third side gore 12 inches, fourth side gore 7 inches.

The following is the condensed plan for the skirt:

Front gore at the top 2 ½ inches: at bottom 6 inches; dart ½ inch.

First side gore at the top 2 ½ inches; at bottom 12 inches; dart ½ and ½ inch.

Second side gore at the top 2 ½ inches; at bottom 12 inches; dart ½ and ¾ inch.

Third side gore at the top 2 ½ inches; at bottom 12 inches; dart ¾ and ½ inch.

Fourth side gore at the top 2 ½ inches; at bottom 7 inches; dart ½ inch.

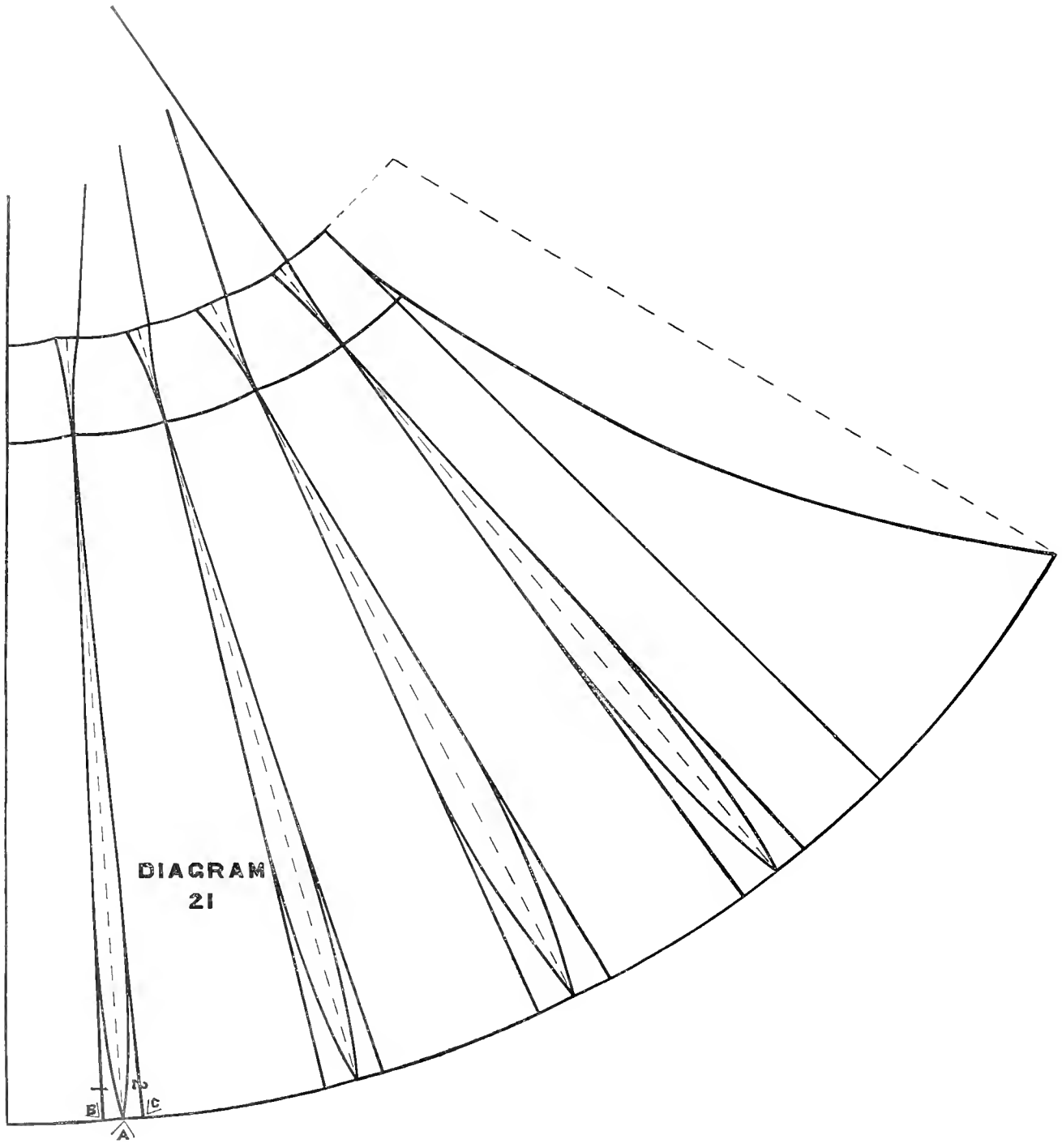
DIAGRAM
21
B
C
A

Pivot at the following points for the gores:

Front gore pivot at $\frac{1}{3}$ of the waist measure.

First side gore pivot at $\frac{1}{3}$ of the waist measure.

Second side gore pivot at $\frac{1}{2}$ of the waist measure.

Third side gore pivot at $\frac{1}{2}$ of the waist measure,

Fourth side gore pivot at $\frac{3}{4}$ of the waist measure.

Draft the skirt as in diagram 20.

To make the flare at the bottom of the skirt, proceed as follows:

A to B is 1 inch (more, if more flare is wanted).

Draw a straight line from B to where it blends into the hip just below the hip line.

Draw a curved line from A into line 1 (about 12 inches above).

A to C is the same as A to B always.

Draw a straight line from C to where line 1 touches the centre line in the diagram.

Draw the curved line from A to line 2, letting it blend into line 2 at the same height as in line 1.

Proceed with the other gores in the same manner, excepting that the amount of flare may be more on each succeeding gore, if desired, as in this diagram. The first being 1 inch; the second 1½ inches; the third 2 inches, and the fourth 2½ inches. The flare is also carried higher in each succeeding gore, the first being 12 inches; the second 14 inches; the third 16, and the fourth 18 inches.

This diagram also shows the change necessary in the back gore for a habit back skirt, there being no back gore at the top, but at the bottom it is necessary to have some fulness in order to make a graceful skirt.

The habit back skirt must not be too close fitting in the centre back; in the diagram the curved line in the centre back slightly increases the size at the hip, which is quite essential for a proper hanging skirt.

When it is desired to have an extra length of skirt in the back, commonly called a train, draft the skirt to the regular length, and then add as much as desired; but care must be taken not to start the same too far forward, for in so doing the draw will come in front of the centre under the arm, which will raise the skirt on the sides at the hip.

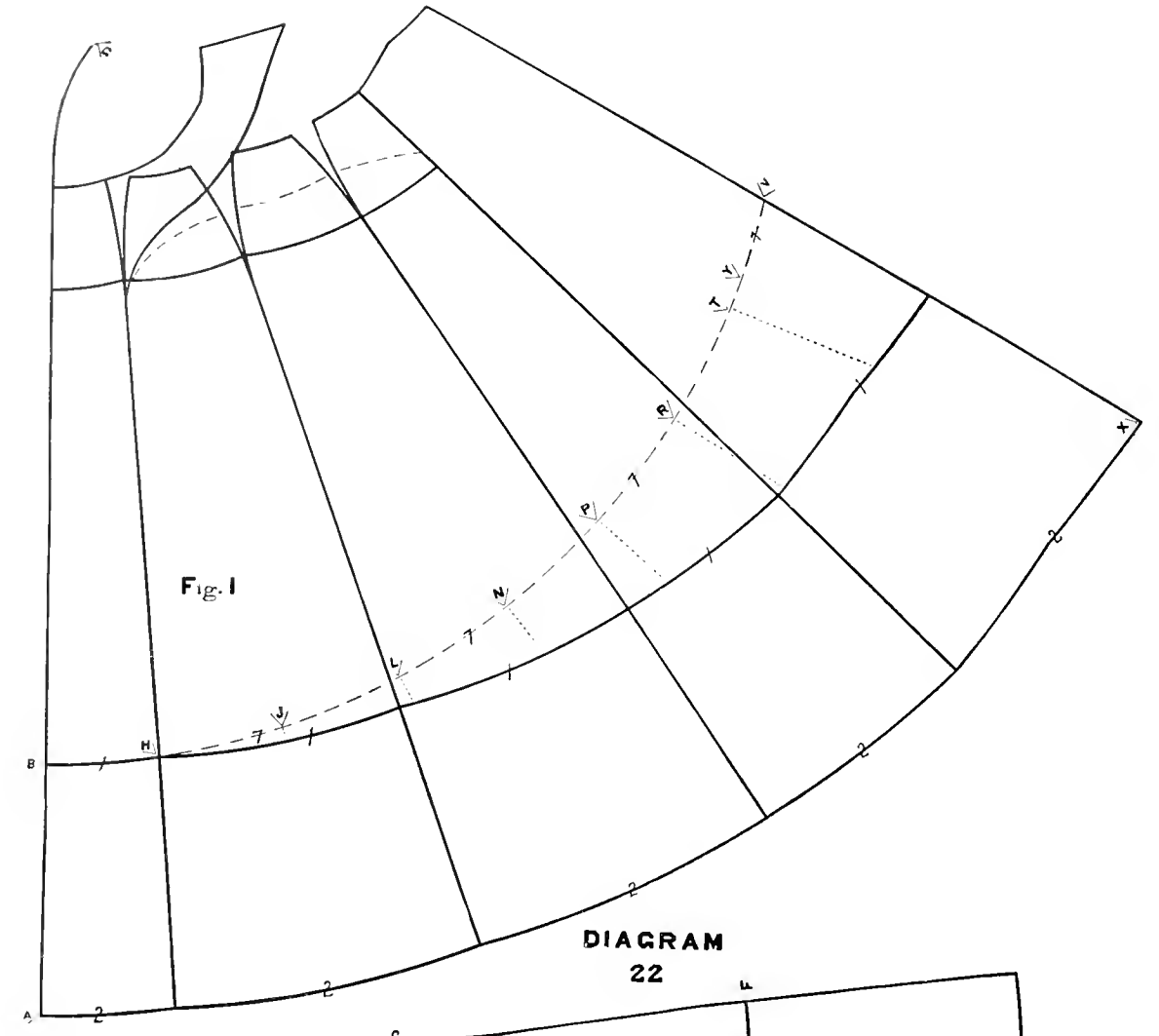

DIAGRAM
22

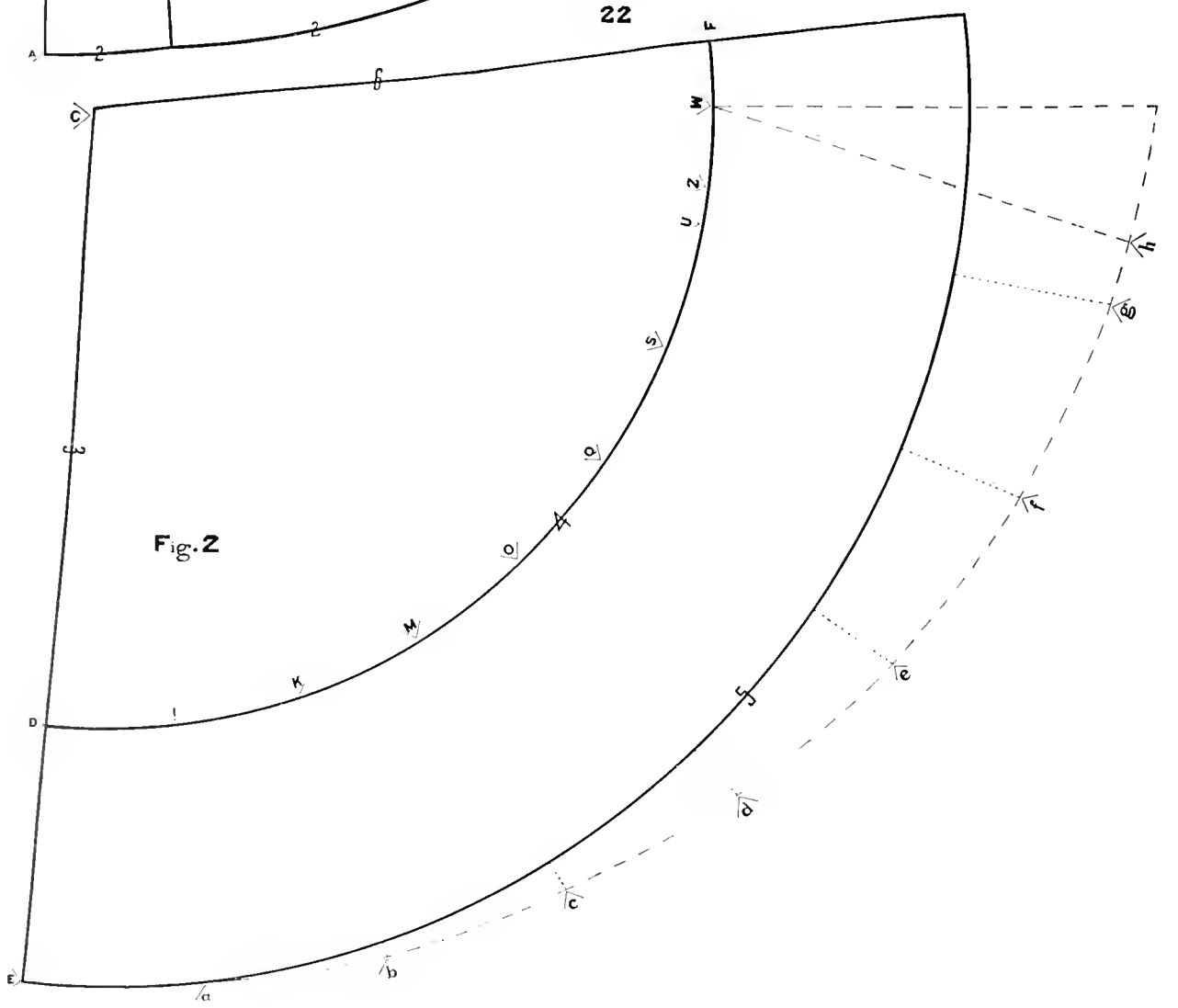

DIAGRAM 22.

GORED SKIRT WITH CIRCULAR FLOUNCE.

Hip measure 40 divided by 2 equals 20.

Waist measure 22 divided by 2 equals 11.

Hip 20 minus 11 equals 9 inches of swell.

Swell 9 multiplied by 8 equals 72 plus 11 (waist) plus 15 (back gore) equals 98, width of skirt without darts.

98 minus 63 (desired width at bottom) equals 35 inches of surplus.

Surplus 35 divided by 7 equals 5 inches for darts.

First dart 1 inch; second dart $2\frac{1}{4}$ inches; third dart $1\frac{3}{4}$ inches.

Front gore at the top $2\frac{1}{2}$ inches, at the bottom $6\frac{1}{2}$ inches.

First side gore at the top 3 inches, at the bottom 16 inches.

Second side gore at the top 3 inches, at the bottom 15 inches.

Third side gore at the top $2\frac{1}{2}$ inches, at the bottom $10\frac{1}{2}$ inches.

Back gore at the top 5 inches, at the bottom 15 inches.

Draft the skirt in the usual manner as shown in diagram 20.

A to B is the depth of flounce, 12 inches (more or less as desired).

Sweep line 1 across the front gore, pivoting at the same point that was used to sweep line 2 on the front gore.

Sweep line 1 across the first side gore, pivoting at the same point that was used to sweep line 2 on this gore.

Sweep line 1 across the second side gore, pivoting at the same point that was used to sweep line 2 on this gore.

Sweep line 1 across the third side gore, pivoting at the same point that was used to sweep line 2 on the same gore.

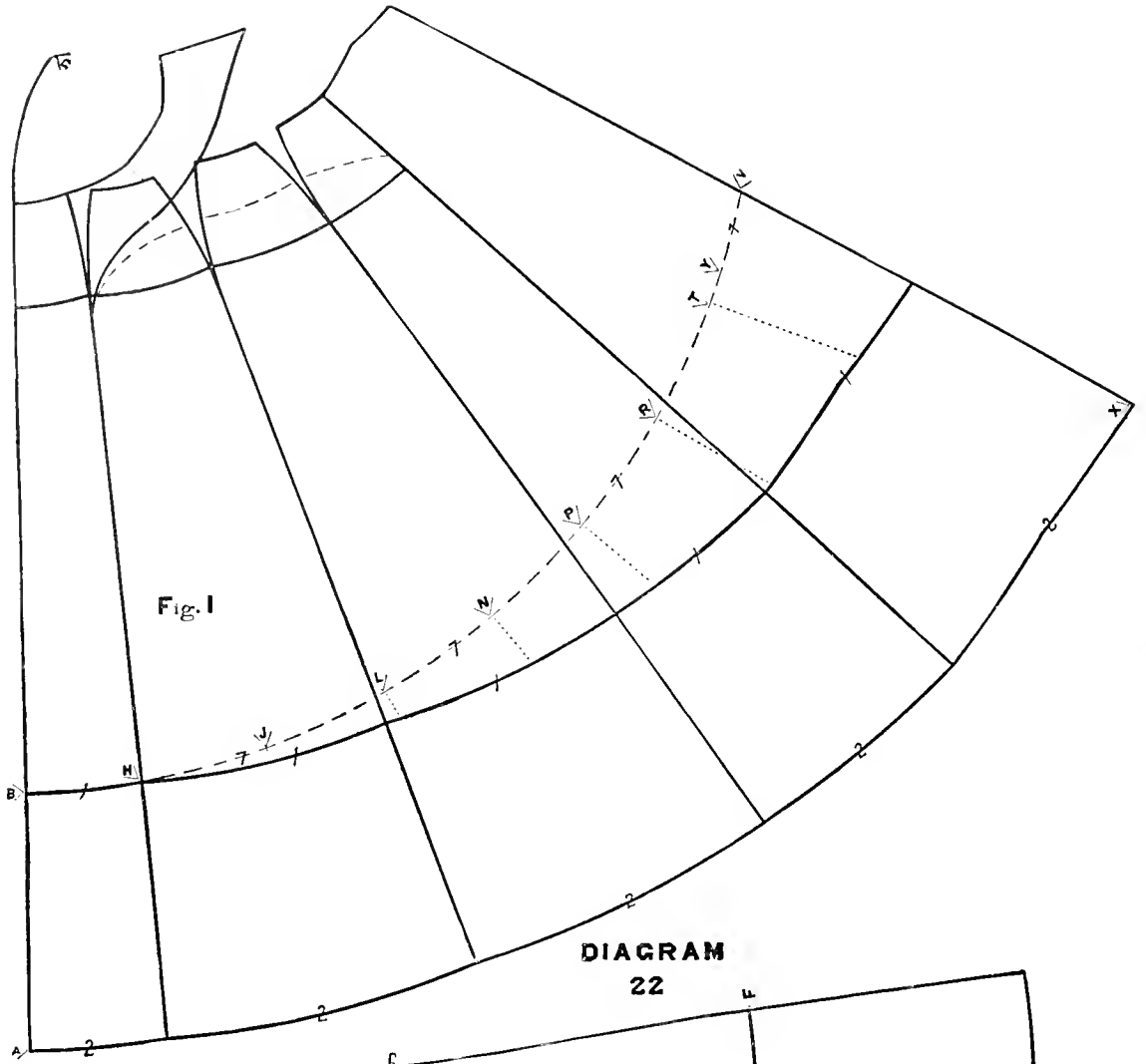

DIAGRAM
22

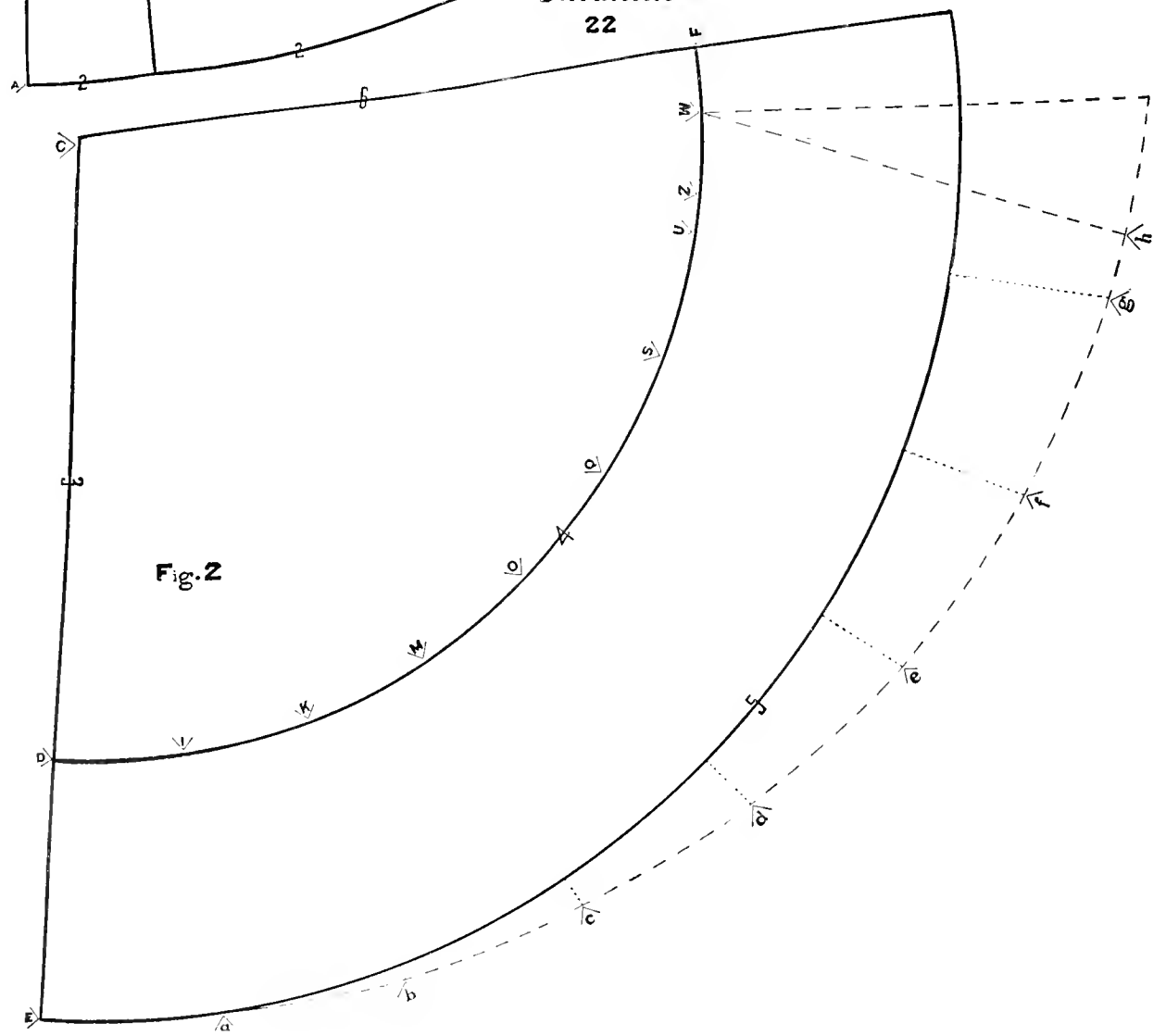

Draw line 1 across the back gore, keeping it 12 inches from line 2.

By cutting through on line 1 across each gore the skirt will be 12 inches too short, therefore draft a flounce 12 inches deep to sew to the bottom of the skirt on line 1.

By measuring around from B on line 1, it is found to be 51 inches, and the top of the flounce will need to be the same dimension, namely, 51 inches.

As it is desired to have the skirt 4 yards around the bottom, it will be necessary to draft a flounce 51 inches around the top, 72 inches around the bottom, and 12 inches deep.

A CIRCULAR FLOUNCE.

The same principles are used to draft a circular flounce that are used in drafting the yoke for the top of a skirt (diagram 17), namely, given the arcs of two concentric circles, with the difference of their radii, to find the radius of the smaller circle.

The arcs being 51 and 72, their difference is 21.

The depth of the flounce, 12 inches, which is the distance between the arcs must be the difference of their radii.

As the differnce between the arcs of two concentric circles is to the arc of the smaller circle as the difference of their radii is to the radius of the smaller circle, we have the following proposition:

21 : 51 :: 12 : (?), and as multiplying the means together and dividing the product by one of the extremes will give the other, we have the following solution: 51 multiplied by 12 equals 612, divided by 21 equals 29 1-7 inches as the radius of the smaller circle.

HENCE THE FOLLOWING RULE.

To draft a circular flounce, multiply the top of the flounce by the depth of the flounce, and divide the product by difference between the size of the top and bottom, the quotient will be the distance from which to pivot.

EXAMPLE.

Top of flounce 51 multiplied by 12 (the depth of the flounce) equals 612 divided by 21 (the difference between the top and the bottom) equals 29 1-7 inches as the distance from which to pivot.

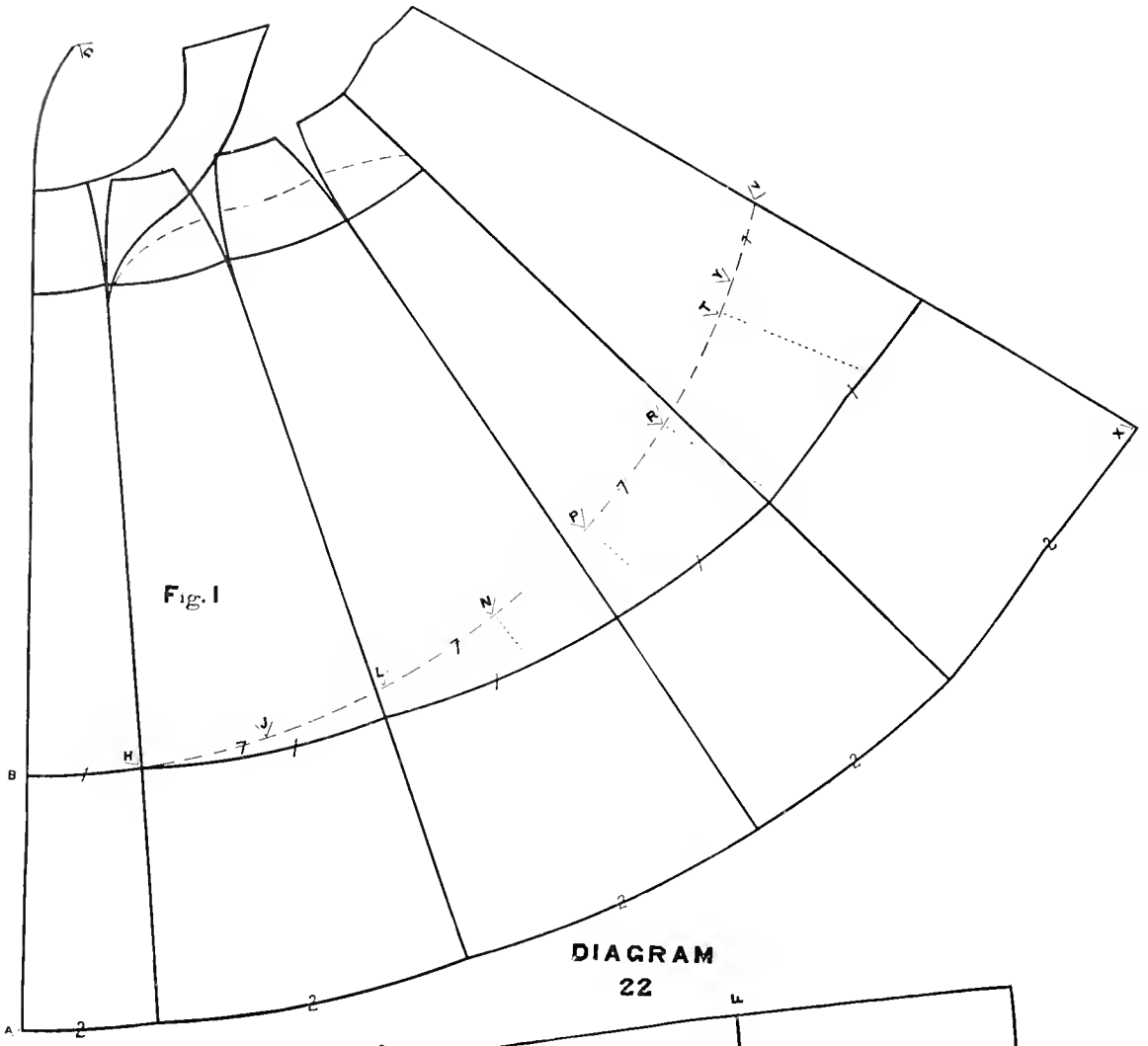

DIAGRAM
22

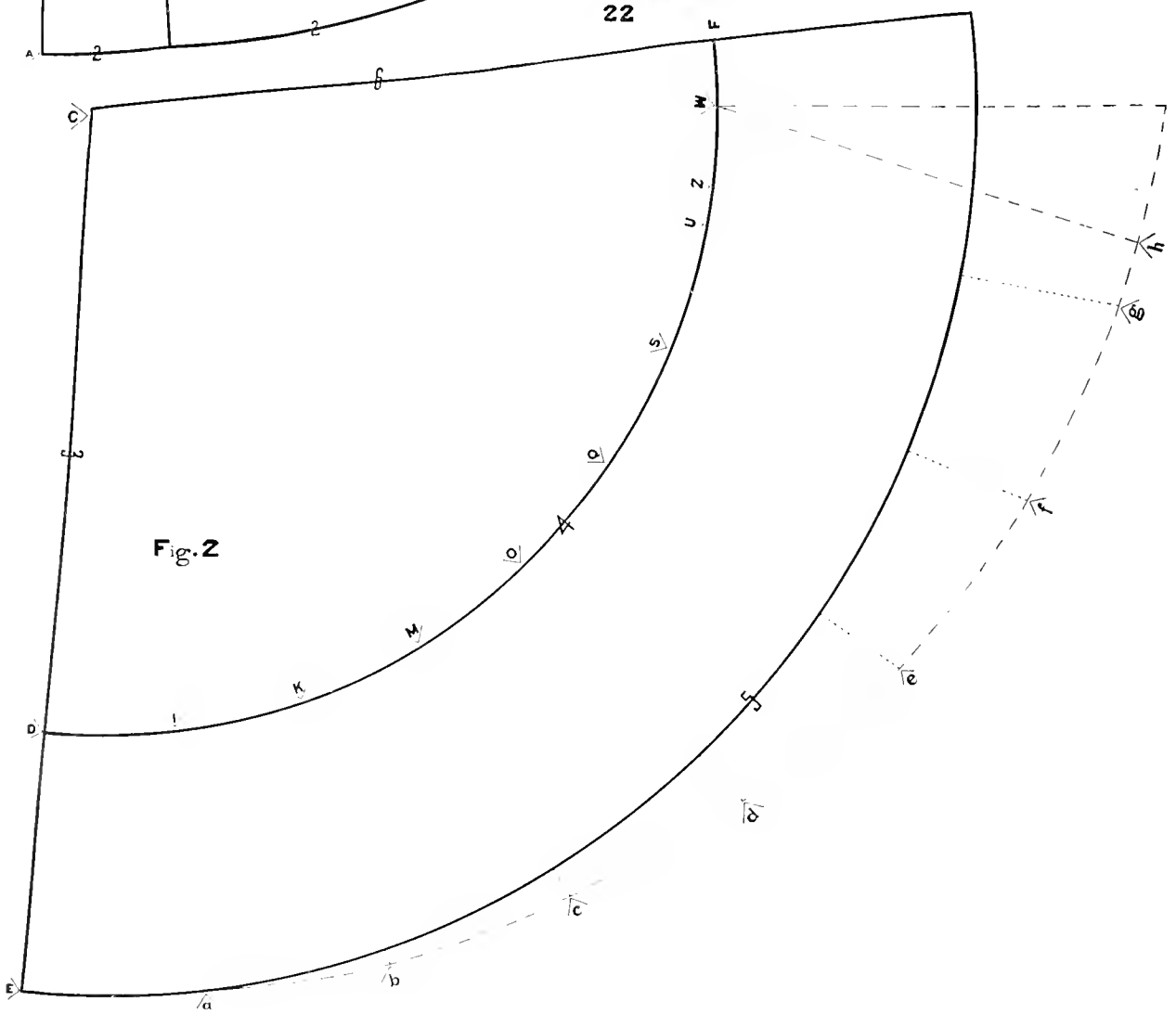

DRAFT THE FLOUNCE AS FOLLOWS:

Draw line 3 straight.

C to D is the distance from which to pivot, 29 1-7 inches.

D to E is the depth of flounce, 12 inches.

Sweep line 4 from D, pivoting at C.

Sweep line 5 from E, pivoting at C.

Measure around on line 4, from D, the size of the flounce at the top, 51 inches, locating F.

Draw a straight line from C through F to line 5.

This gives a flounce 51 inches at the top, and 72 inches at the bottom, on the half, or four yards around the bottom of the skirt.

Lines may be drawn from the pivot point (point C) through the flounce at any point, dividing it into sections, and these lines will run straight up and down, but unless they are kept in line with the pivot point, they will slope to the front or back.

If points are wanted on the top of the flounce to run up the seams, draw a line from C to the point where the projection is wanted, and this line will give the direction in which they should run.

TO DRAFT A GRADUATED CIRCULAR FLOUNCE.

Draft a skirt and a circular flounce as previously described, making the circular flounce the same depth all the way around, as the graduated circular flounce is to be in the centre front.

Measure up from the bottom, in the centre back, the height the flounce is wanted at this point, and locate V, as X to V in diagram.

Select a point to pivot at that will strike a circle from B to V and give the desired shape (it may be more curved or straighter than in diagram).

In this diagram line 7 is pivoted at G.

Having drafted a flounce to sew to line 1, if this flounce is sewed to line 7, the flounce will be too short at the bottom; proceed to add to the bottom as follows:

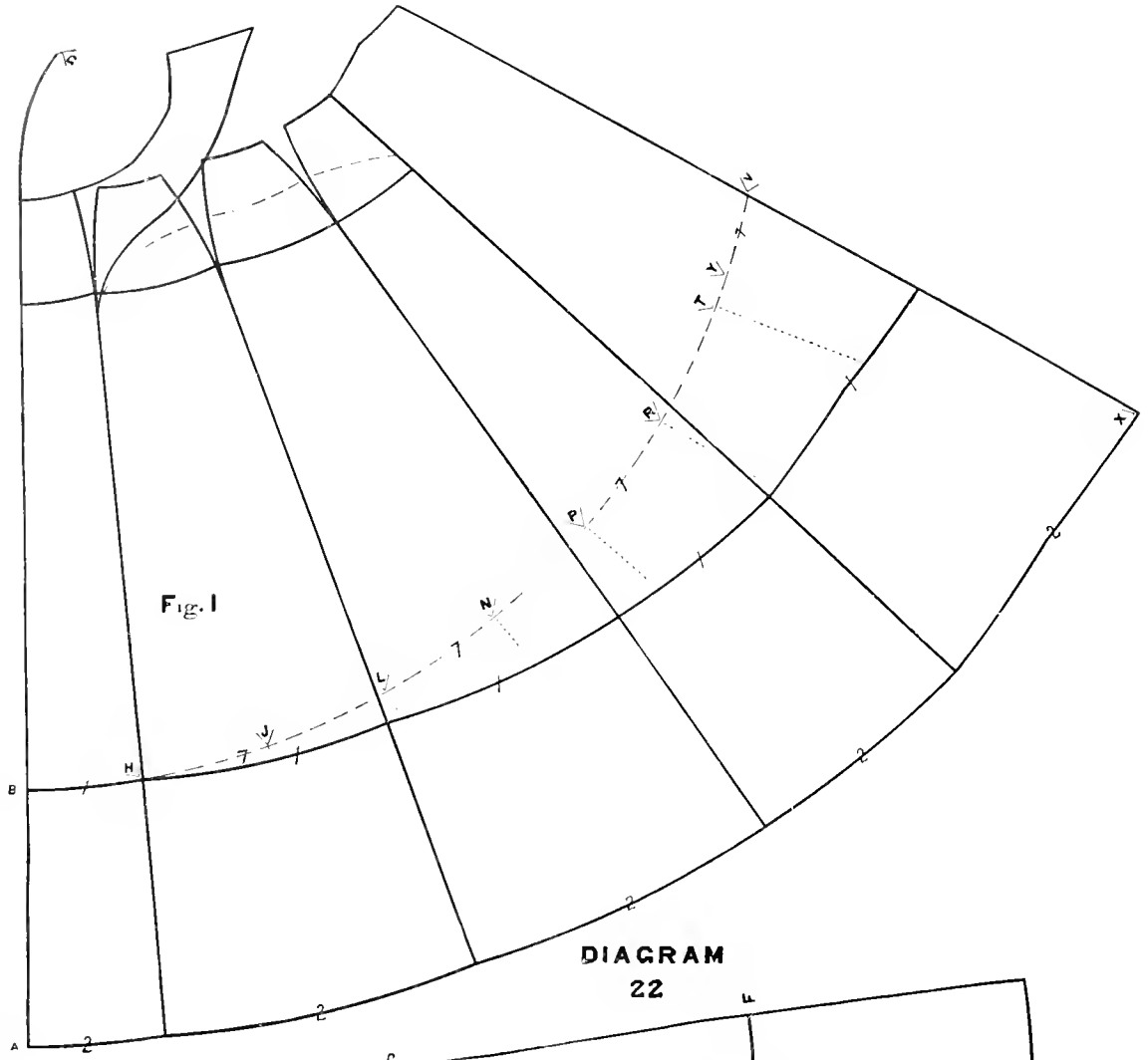

Fig. 1

DIAGRAM
22

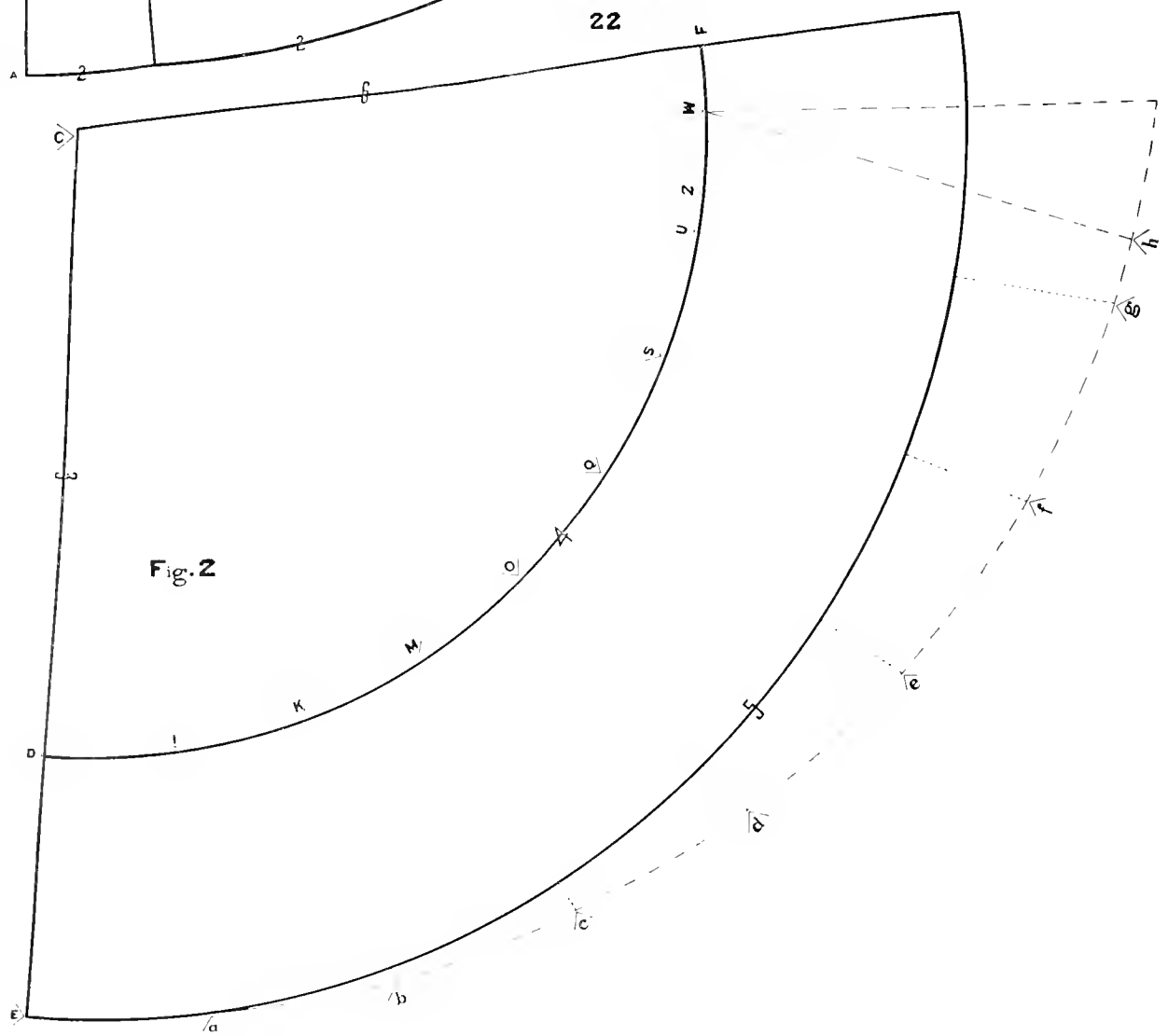

Fig. 2

Measuring from B on line 7, 6 inches, establishing H; it is found that lines 1 and 7 are the same at this point, but from this point they diverge, therefore from this point there must be an addition to the bottom of the flounce.

D to I on Figure 2 is the same as B to H on Figure 1, 6 inches.

Place the edge of the rule on C and I, locating (a) as the place where the addition to the bottom of the flounce begins.

H to J is 6 inches, and by placing the edge of the rule on G and J, we get the dotted line from J to line 1.

I to K is the same as H to J.

Place the edge of the rule on C and K, and locate (b) the same distance from line 5 as J is from line 1, namely, $^3/_4$ of an inch.

J to L is 6 inches.

Place the edge of the rule on G and L, and draw the dotted line down to line 1.

K to M is the same as J to L.

Place the edge of the rule on C and M, and locate (c) the same distance from line 5 as L is from line 1, namely, 1 $^1/_2$ inches.

L to N is 6 inches.

Place the edge of the rule on G and N, and draw the dotted line from N to line 1.

M to O is the same as L to N.

Place the edge of the rule on C and O, and locate (d) the same distance from line 5 as N is from line 1, namely, 3 inches.

N to P is 6 inches.

Place the edge of the rule on G and P, and draw the dotted line down to line 1.

O to Q is the same as N to P.

Place the edge of the rule on C and Q, and locate (e) the same distance from line 5 as P is from line 1, namely, 4 $^1/_2$ inches.

P to R is 6 inches.

Place the edge of the rule on G and R, and draw the dotted line down to line 1.

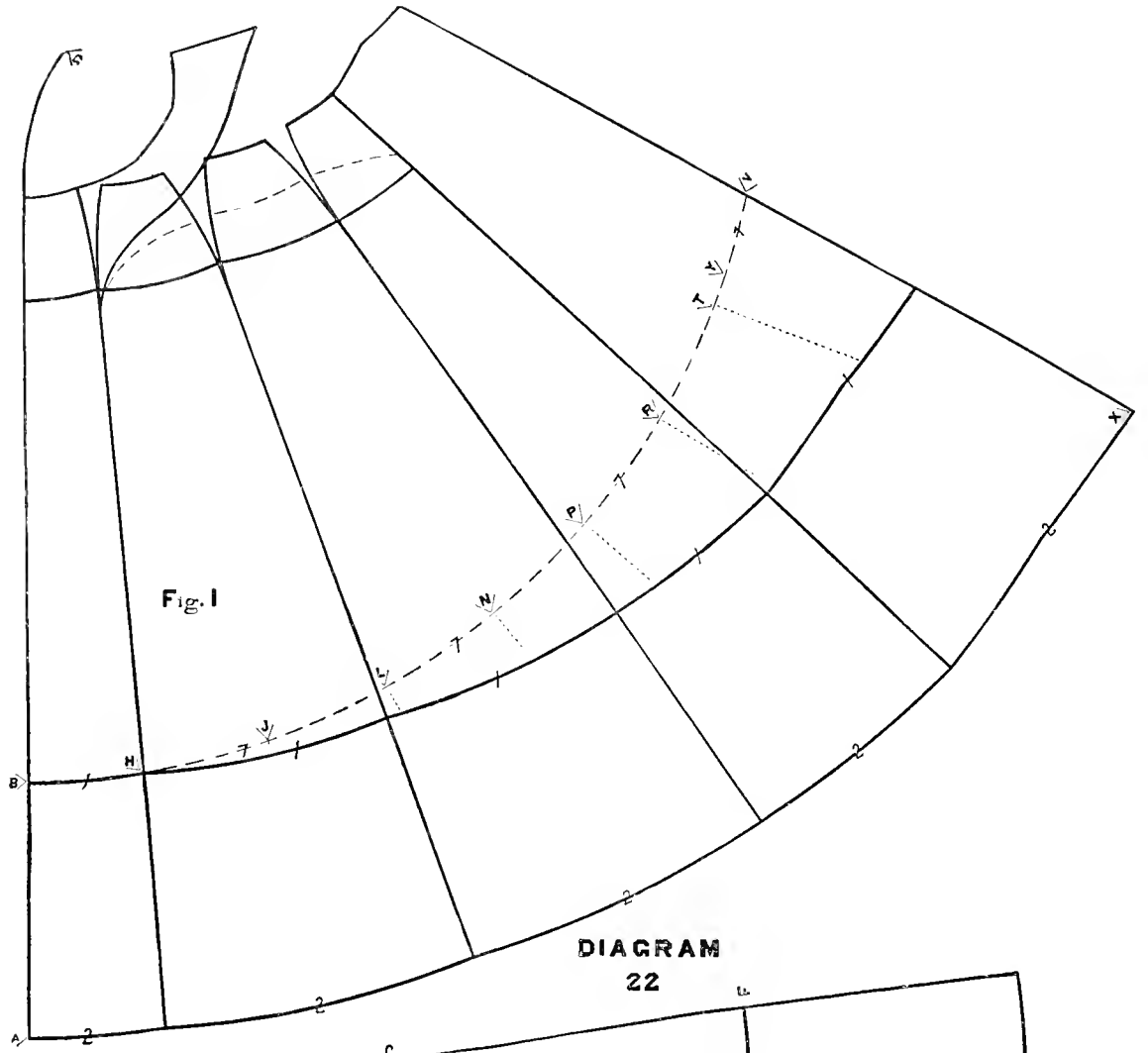

DIAGRAM
22

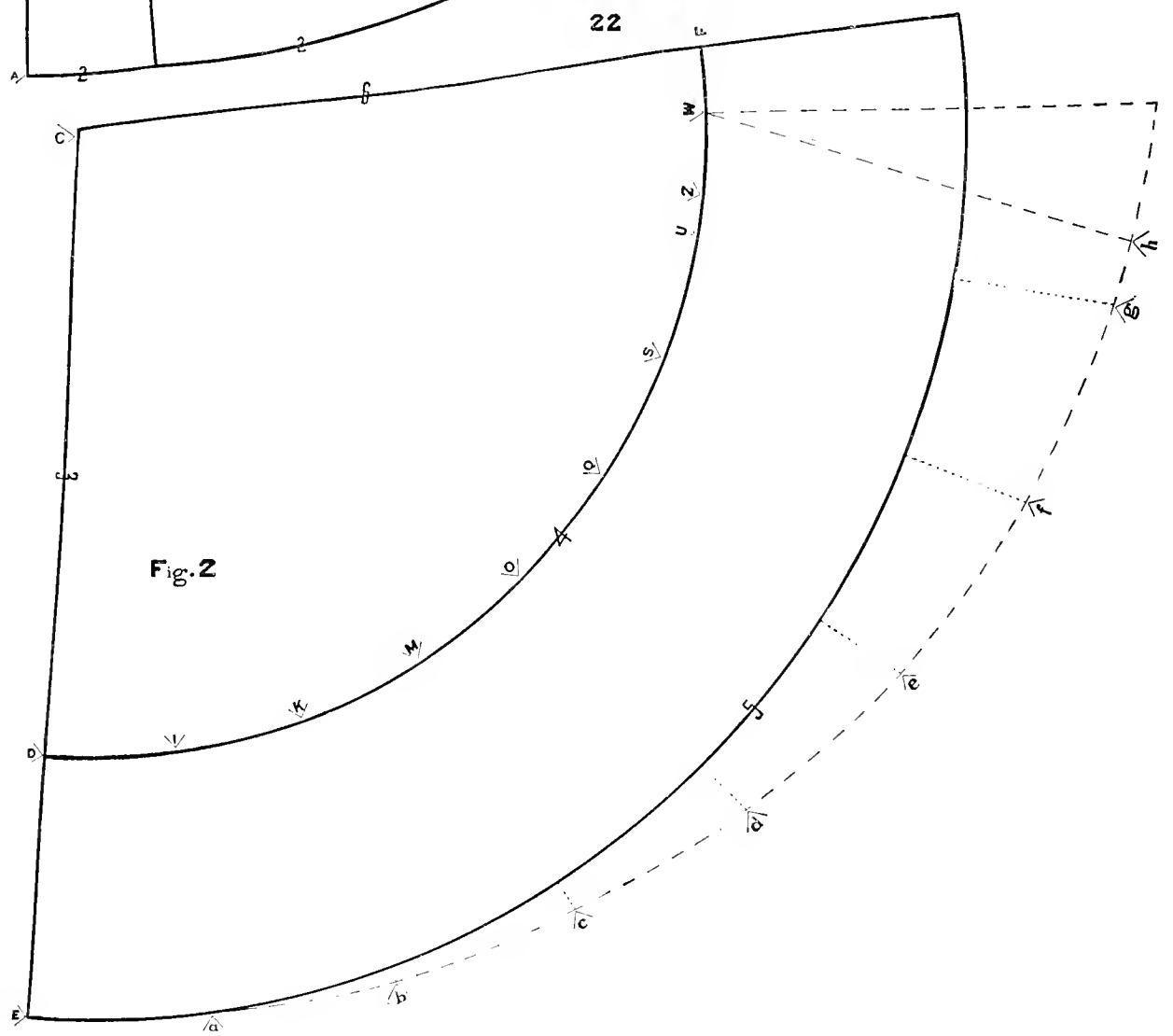

Q to S is the same as P to R.

Place the edge of the rule on C and S, and locate (f) the same distance from line 5 as R is from line 1, namely, 6 inches.

R to T is 6 inches.

Place the edge of the rule on G and T, and draw the dotted line down to line 1.

S to U is the same as R to T.

Place the edge of the rule on C and U, and locate (g) the same distance from line 5, as T is from line 1, namely, 7½ inches.

U to W is the same as T to V.

Place the edge of the rule on G and X, locating Y.

U to Z is the same as T to Y.

Place the edge of the rule on C and Z, locating (h).

Draw a line from W to (h).

Draw the curved line from (a) through b, c, d, e, f, and (g) to (h).

Extra fulness may be thrown into the centre back, as shown by the dotted line if desired.

This diagram also shows a yoke forming a part of the front gore, or in other words, the front gore forms a yoke running around the waist.

This is done by cutting off the tops of the side gores, and putting the waist lines together, as shown in the diagram.

In this style of skirt it is best to cut the side gores full length at the top, and let them run under the yoke, and sew to the waist band.

DESIGNING FANCY GARMENTS.

The novice not accustomed to designing may think that the plain—sometimes called flat—pattern has nothing to do with the fancy garment; this, however, is incorrect, for all fancy garments should be made from the plain, smooth-fitting pattern, by adding fullness in the shape of tucks, plaits, gathers, etc., but after the fullness has been added, the shape must be the same as the plain flat pattern, in order to fit the person for whom it was designed.

It is therefore necessary to draft the plain, smooth-fitting pattern, and from this pattern design the fancy pattern.

To illustrate how this may be done, we will take a skirt with a side plait at each seam, 1 inch wide, and turned toward the back.

Draft a plain skirt with the desired number of gores, then add 2 inches to the back side of each gore, this amount being taken up by the plait, leaves the gore the original size and shape.

If the plait is to lay toward the front, it will be necessary to add the 2 inches to the front side of each side gore, in order to cover the seams.

For a skirt with a box-plait in the centre of each gore proceed as follows:

Take a piece of paper the length of the skirt, and form a box-plait in the centre of the same, now lay the plain gore on this paper with the box-plait in the centre of the gore, and mark around the gore; cut the paper on these lines, while the plait is folded, and you will have the same size and shape as the original gore; smooth out the plate in the pattern, and you will have a pattern the correct shape to cut the goods by, and when the box-plait is formed in the goods, it will have the same shape as the original gore.

Patterns may be cut at given points and seamed at these points, thereby forming panels, etc., but when the several pieces are joined, the whole must be the same size and shape as the original flat pattern.

A section may be taken from any plain, flat pattern, and a piece inserted in its place, which may be plaited, gathered, shirred, or otherwise fulled, but this piece, when so fulled, must be the same size and shape as the section which was cut from the pattern, otherwise the garment will not fit.

The above applies not only to skirts, but to all other garments as well.

The Scientific Tailor

A treatise on the designing and drafting of patterns for all classes of garments employing the principles used in mechanical drafting.

The author having spent several years in introducing his work into the Factories, Schools, Tailoring and Dress-making establishments throughout the United States and Canada in order to thoroughly test each and every part of the same, now offers it to the public in separate volumes, each one being adapted to a special branch of the garment industry.

This work is especially adapted to the wants of Technical and Manual Training Schools, being in the educational line, and based on Geometry.

Price $10.00

The **CURVE-RULE,** described in this volume, is a great boon to the garment designer, enabling him to do more and far better work than can possibly be done by freehand movement.

Price $3.00

(By Express)

SQUARES, RULES, TRACING WHEELS, ETC., ALWAYS ON HAND

We are prepared to furnish block patterns for all classes of garments for factory purposes, which are far superior to any pattern heretofore offered to the general public; our large sizes fitting as well as the intermediate sizes, as we do no grading, each size being an individual creation.

Special patterns drafted to measures for any style of garment wanted.

THE SCIENTIFIC TAILOR,

134 West 25th Street, NEW YORK.

LIBRARY OF CONGRESS
0 013 973 152 9